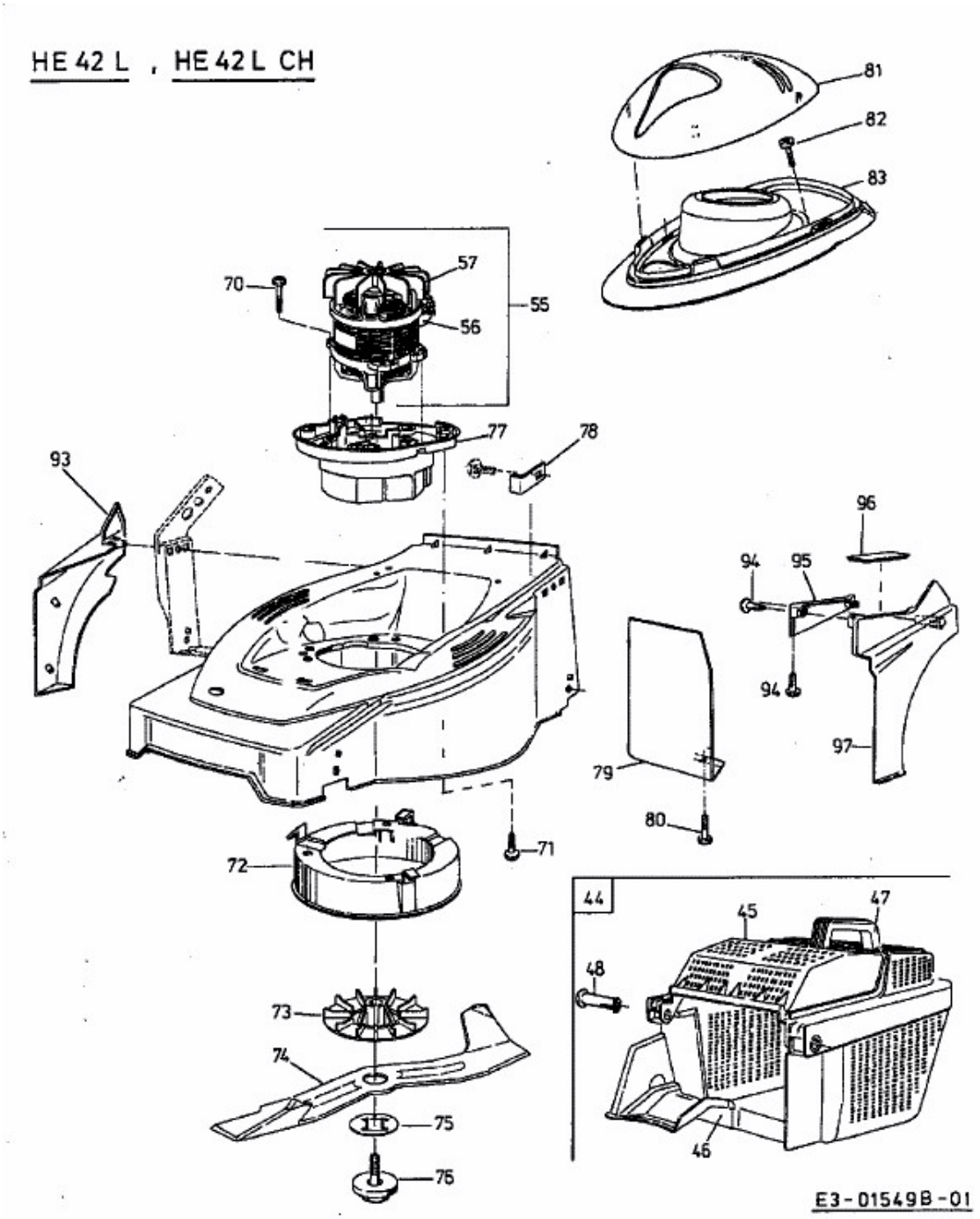HE 42 L > 18C-L8F-664 (2002) > ELEKTROMOTOR, GRASFANGKORB, MESSER