FF 327-1 > 18BKE0E-634 (2009) > GRUNDGERÄT
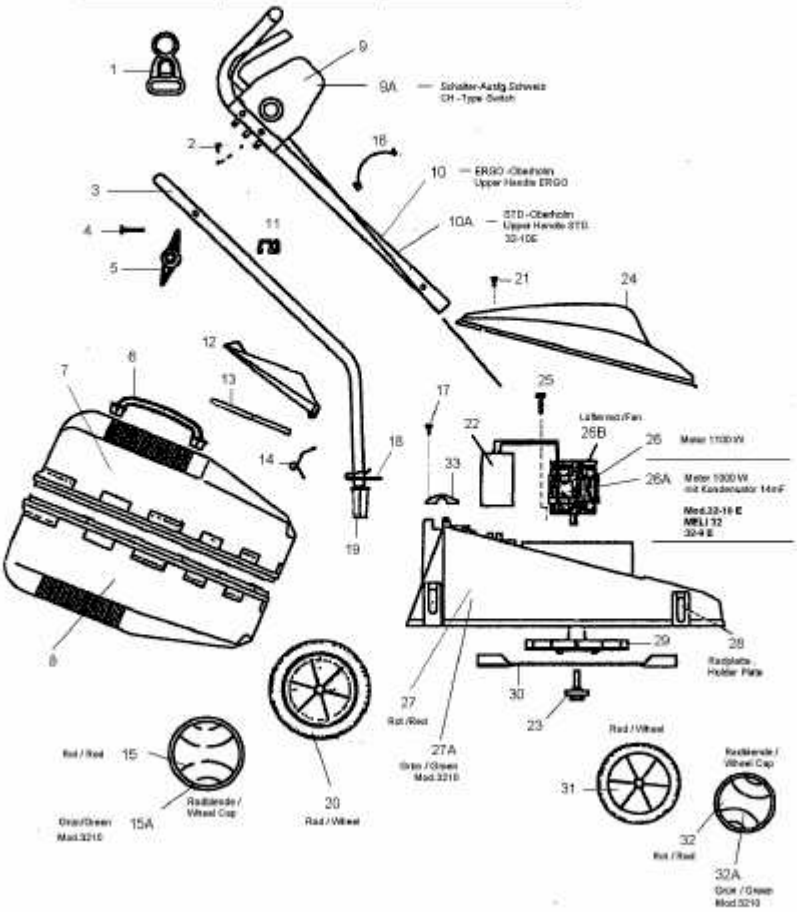
34-11 E FF 327 FF 327-1 FF 327-1	18B-E0E-600 18B-E1E-665 18BKE0E-634 18B-E0E-634	1100Watt
32-10 E MELI 32 32-9 E	18B-E0C2600 18B-E0C2616 18BKE0C2600	1000Watt