32-10 E > 18B-E0D1600 (2007) > GRUNDGERÄT

BG 1100	18B-E0E-625	1100Watt
FF 327-1	18B-E0E-634	
FF 327	18B-E1E-665	
FF 328	18B-E0D1665	1000Watt
32-10 E	18B-E0D1600	

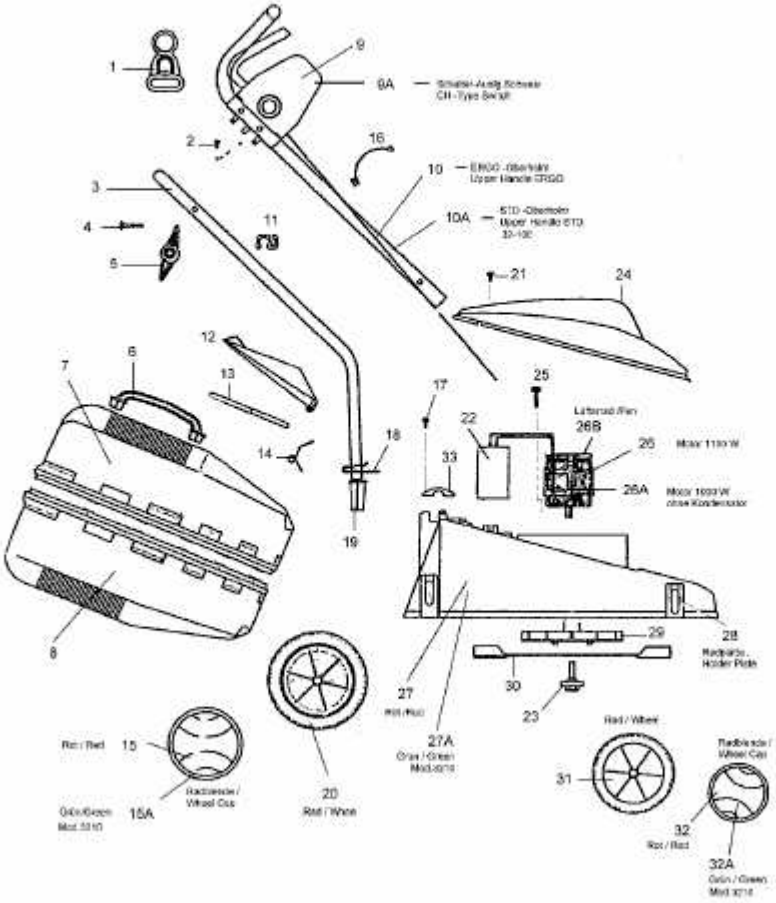

E3-03376A-01