E 45 > 18A-T1F-628 (1998) > ELEKTROMOTOR, MESSER

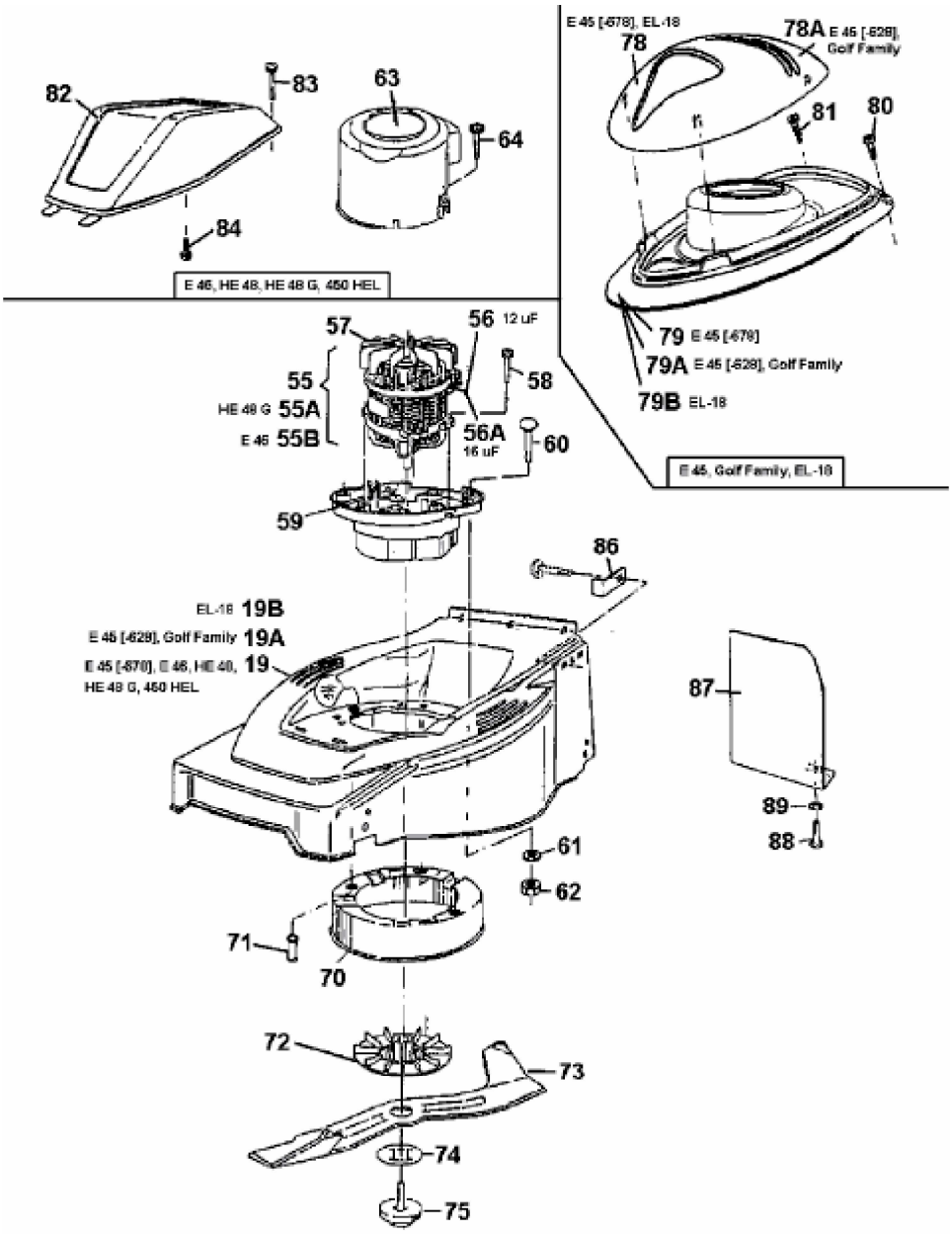

fsg