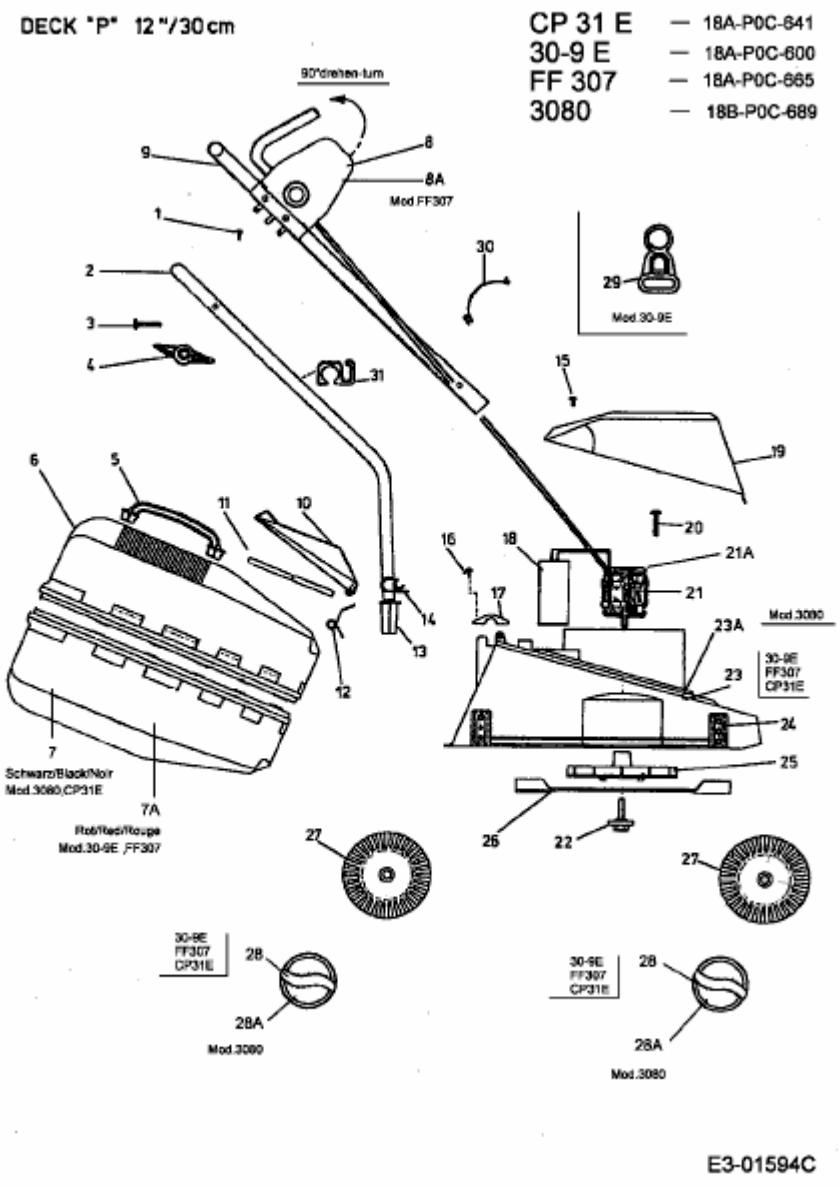
DECK "P" 12"/30cm
CP 31 E — 18A-P0C-641
30-9 E — 18A-P0C-600
FF 307 — 18A-P0C-665
3080 — 18B-P0C-689
90°drehen-turn
Mod.FF307
Mod.30-9E
Mod.3080
30-9E
FF307
CP31E
Schwarz/Black/Noir
Mod.3080,CP31E
Rot/Red/Rouge
Mod.30-9E ,FF307
E3-01594C