E 401 > 18A-L2G-619 (1998) > ELEKTROMOTOR, MESSER

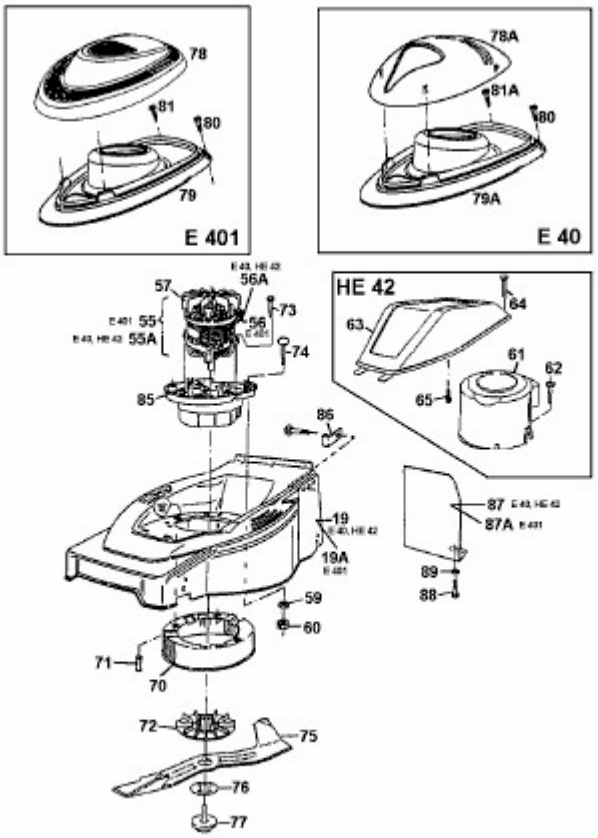

fsg