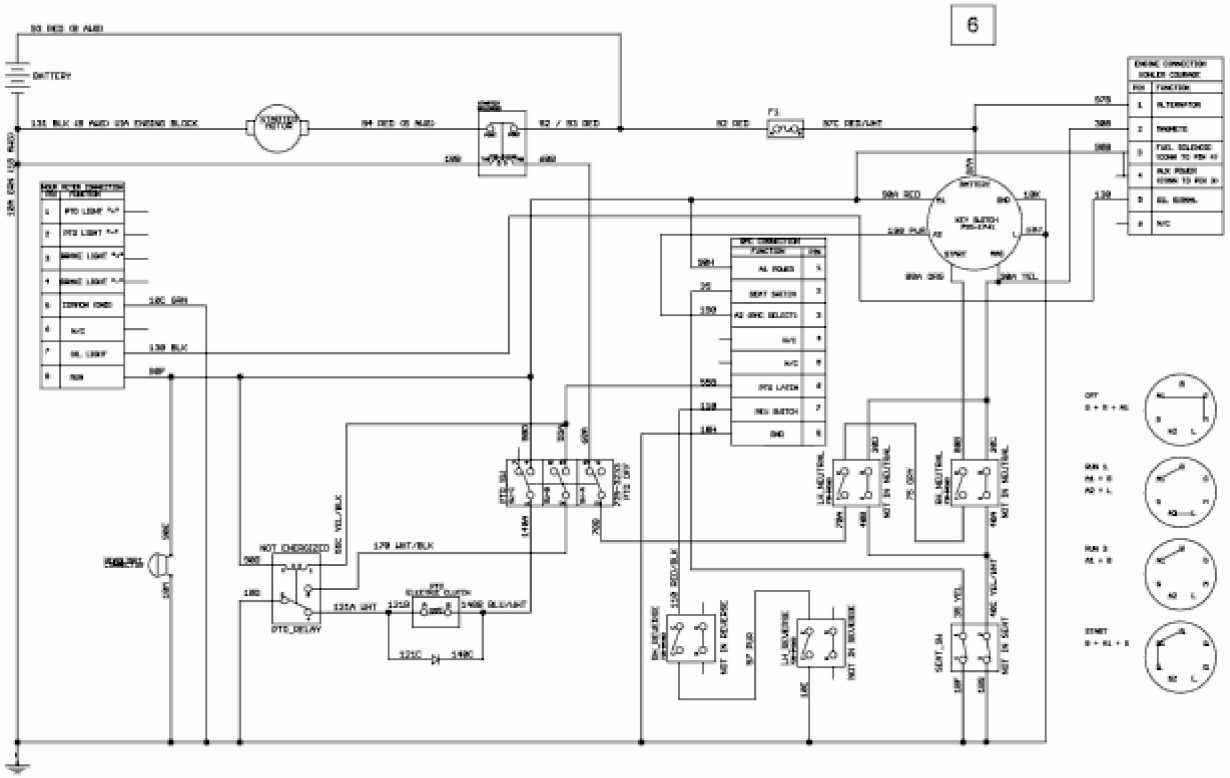
6
BATTERY
E3-09008B-02