MF 48-22 FMZ > 17BI4BFY695 (2013) > SCHALTPLAN

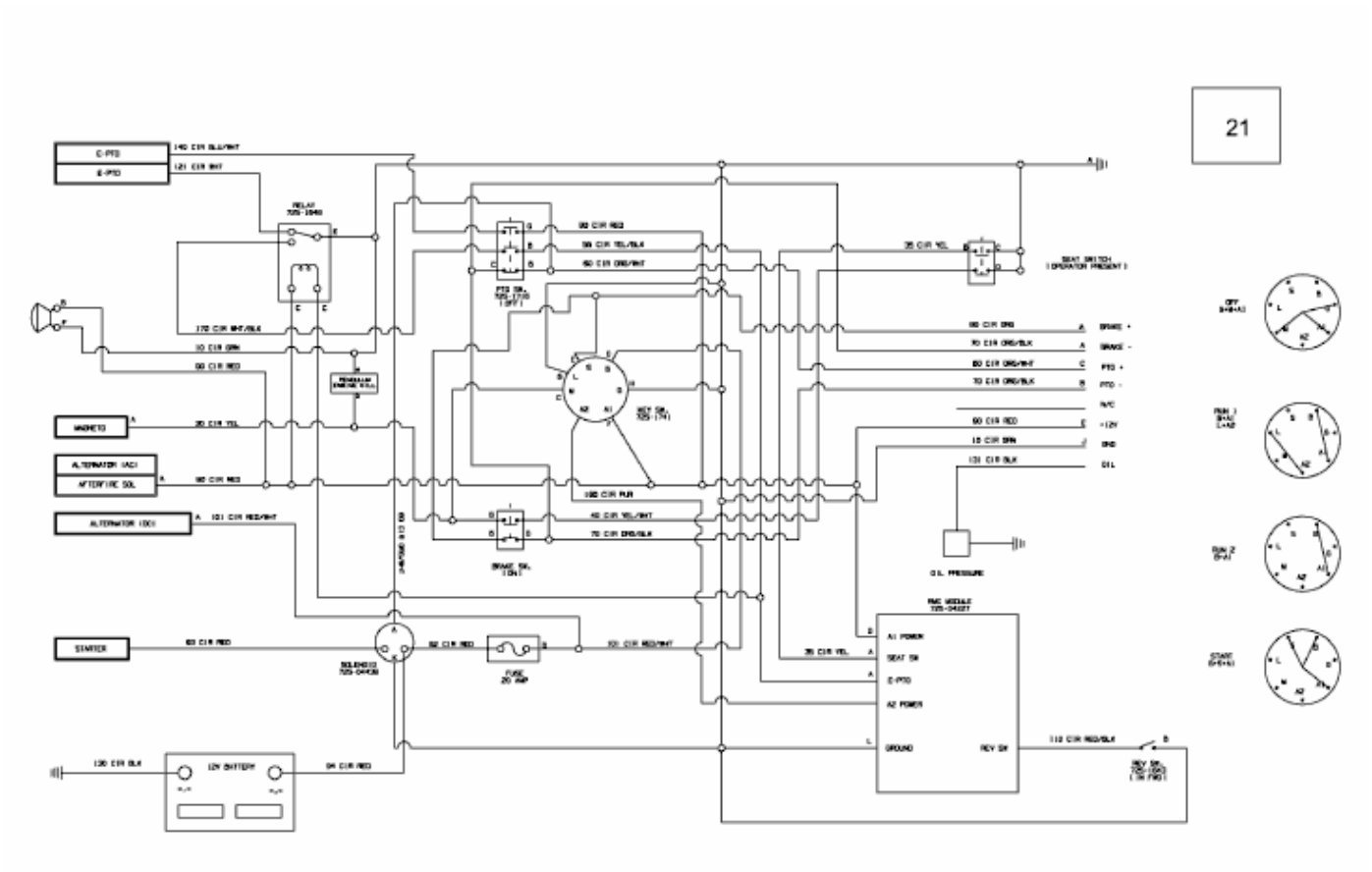

E3-04665B-02