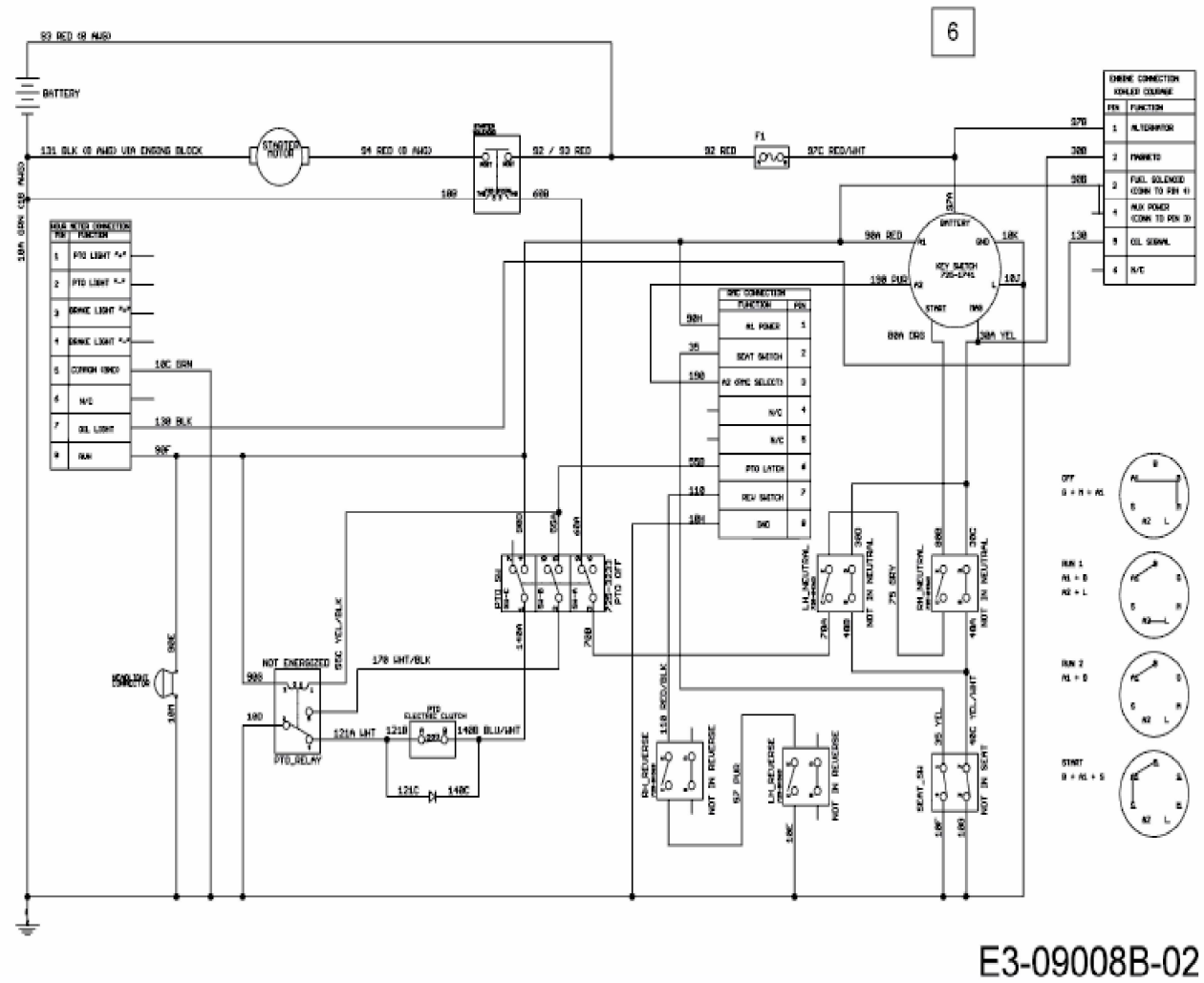
6
BATTERY
STARTER MOTOR
F1
KEY SWITCH
PTO_RELAY
NOT ENERGIZED
NOT IN NEUTRAL
NOT IN REVERSE
NOT IN SEAT
E3-09008B-02