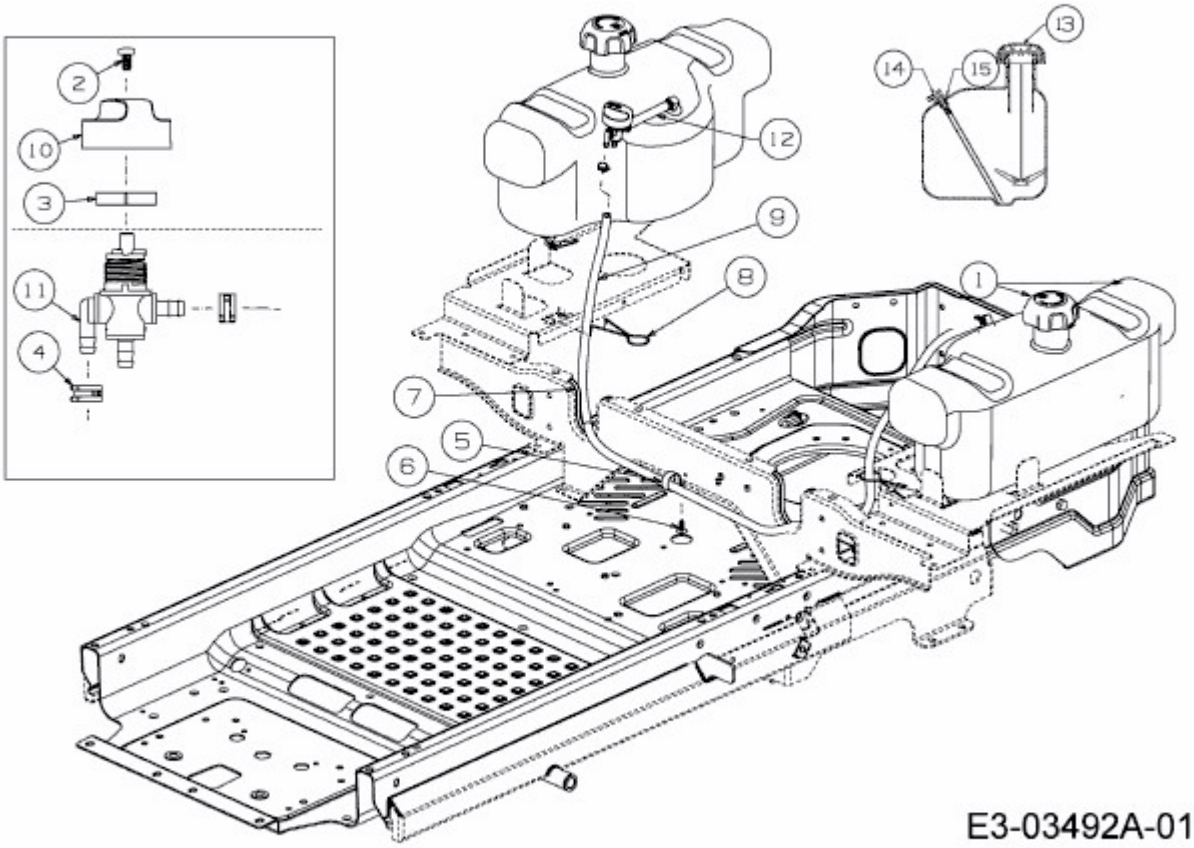Z-FORCE SZ 48 > 17AIDGHB603 (2016) > TANK