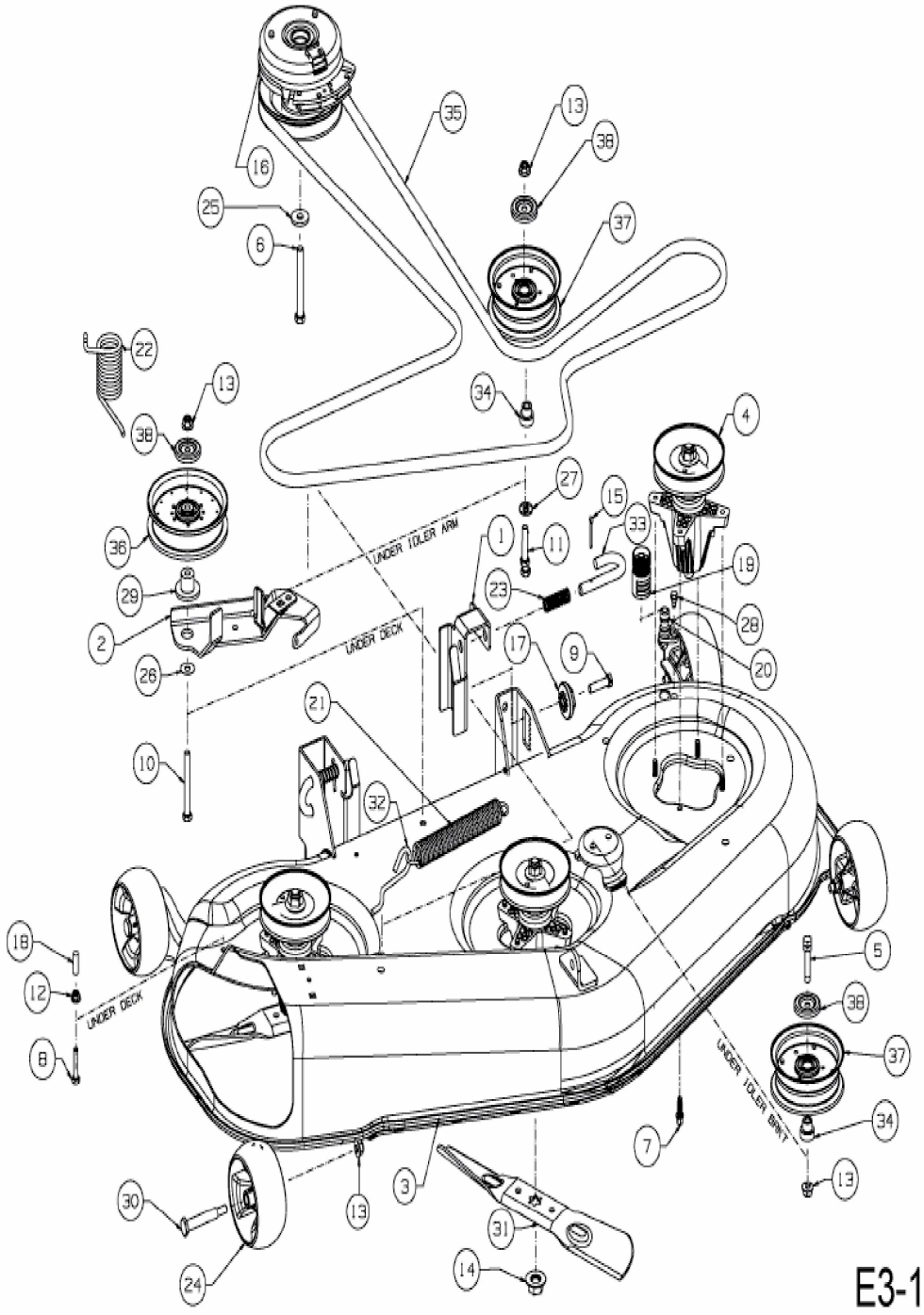
UNDER IDLER ARM
UNDER DECK
UNDER DECK
UNDER IDLER BRKT
E3-10451A-01