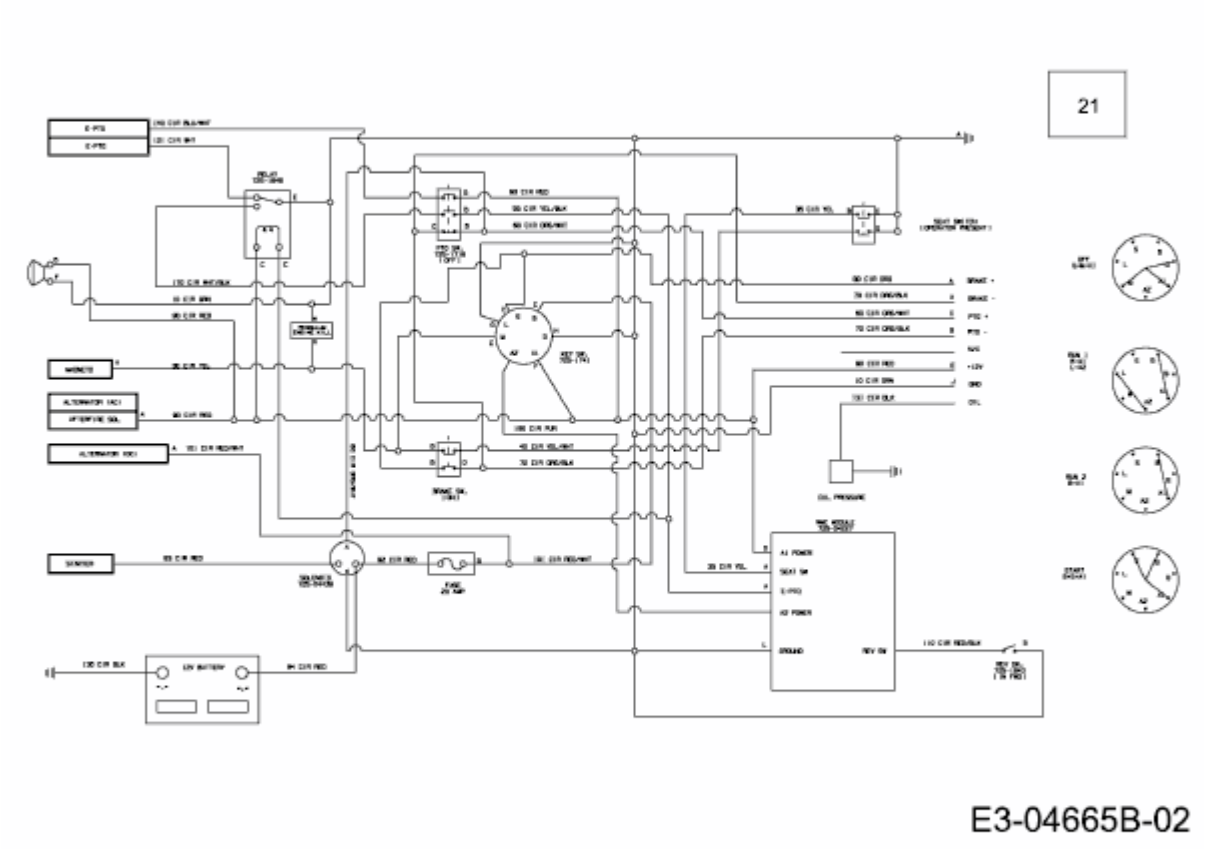MF 50-22 FMZ > 17AI4BFP695 (2010) > SCHALTPLAN