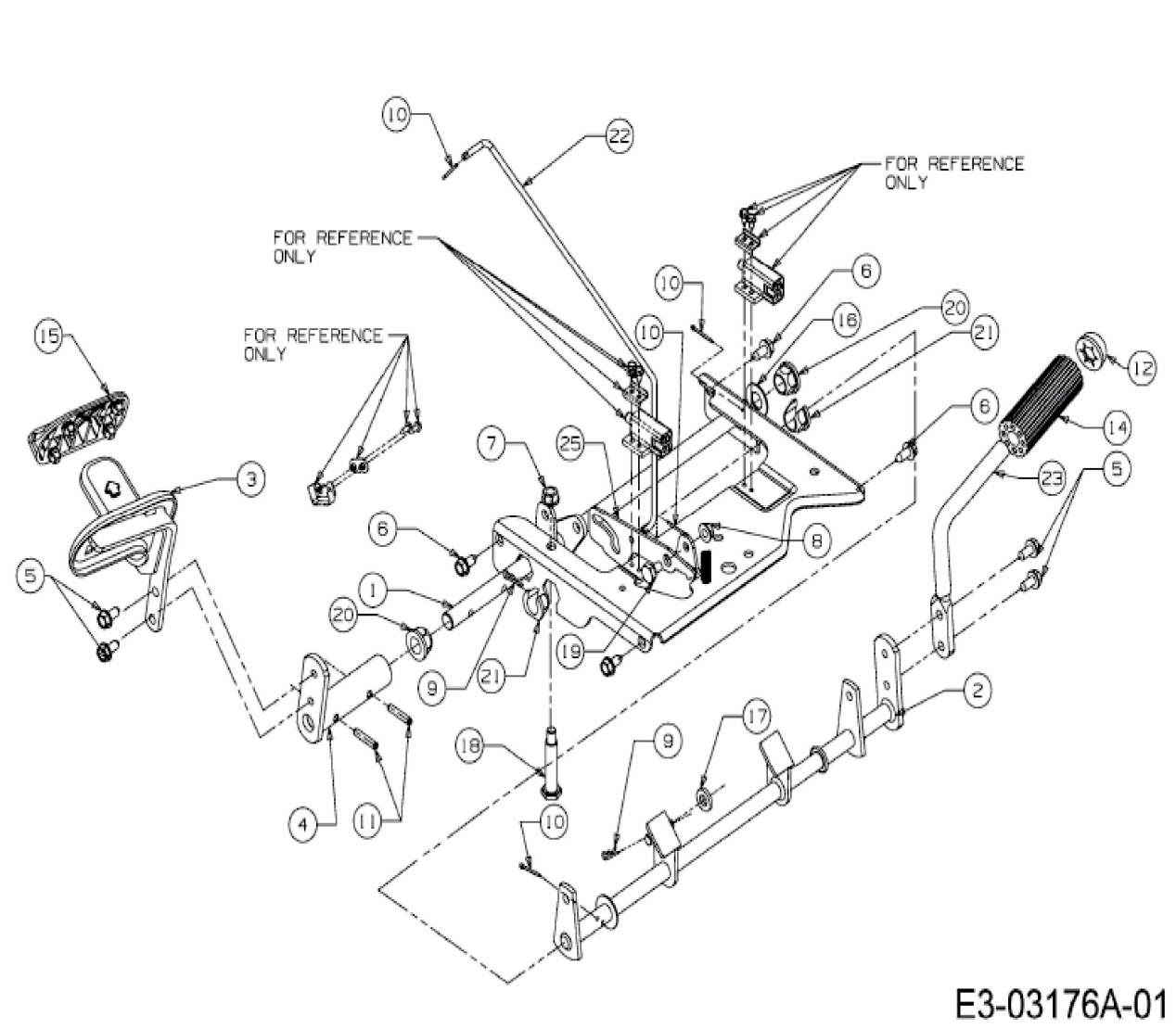
FOR REFERENCE ONLY
FOR REFERENCE ONLY
FOR REFERENCE ONLY
E3-03176A-01