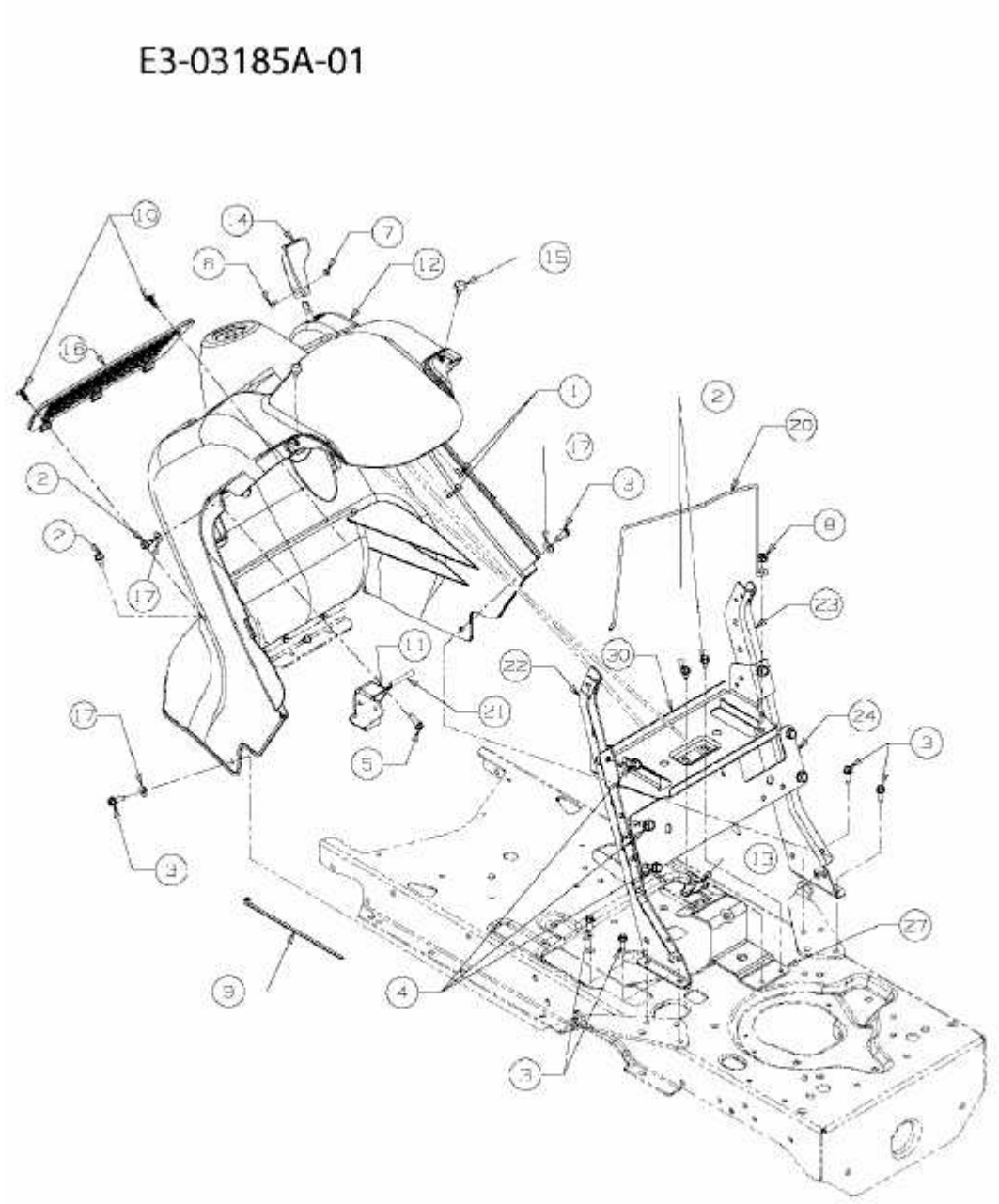ALL ROUNDER 1050 > 17AH9TKP603 (2007) > ARMATURENBRETT