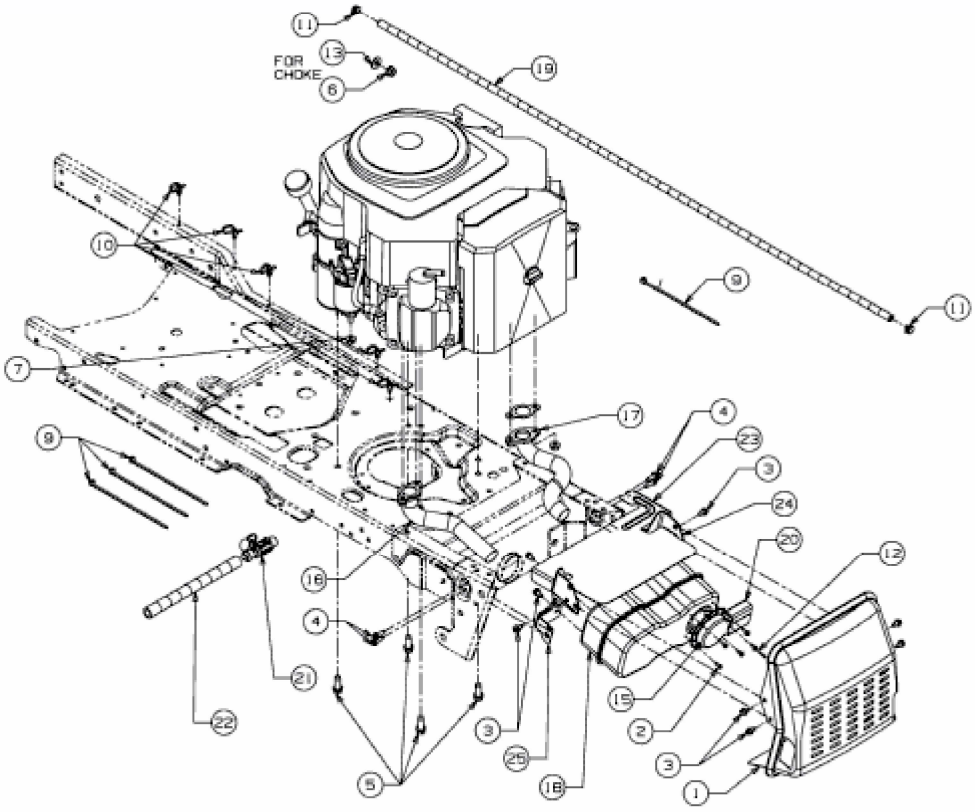
FOR CHOKE
11
13
6
19
10
9
11
7
17
4
23
3
24
20
12
9
16
4
21
22
5
3
25
18
15
2
3
1

E3-03177B-01