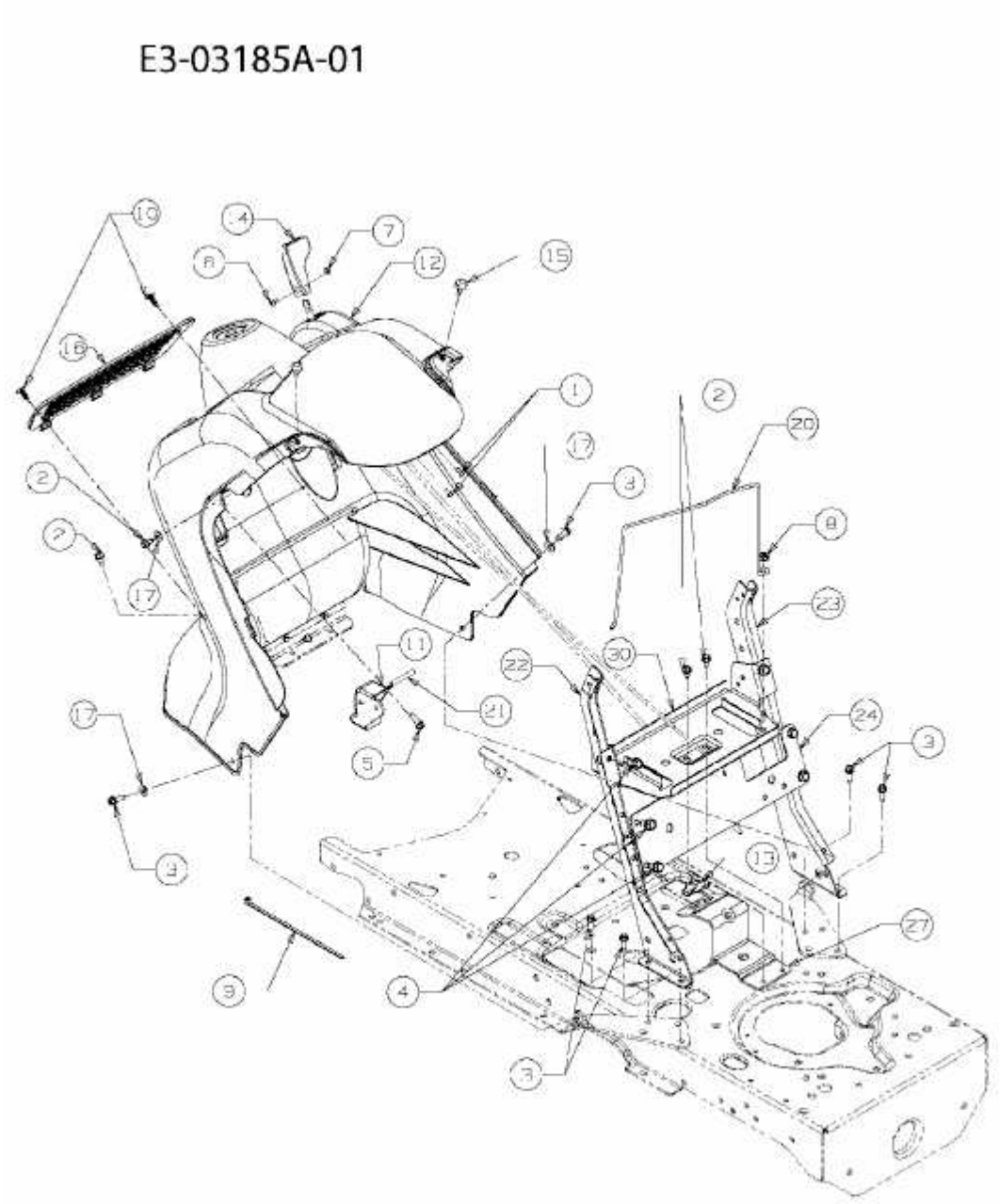ALL ROUNDER 1050 > 17AH9BKP603 (2009) > ARMATURENBRETT