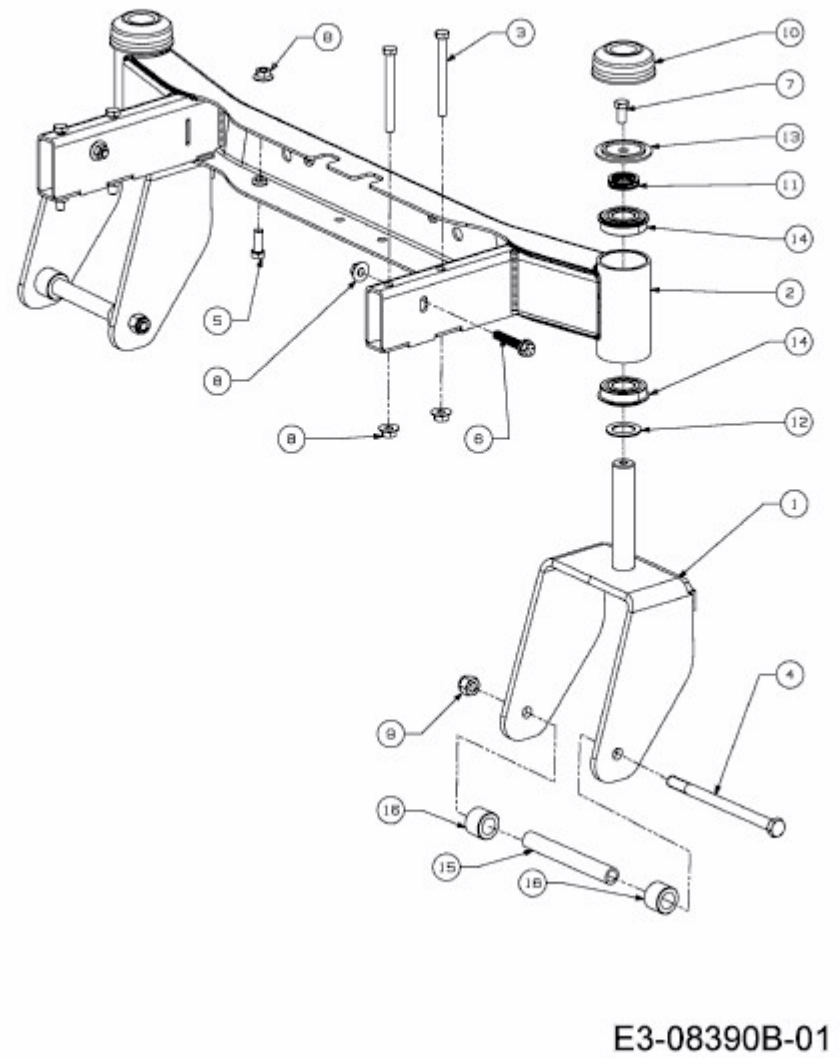RZTL 50 > 17AFCACP330 (2015) > VODERACHSE