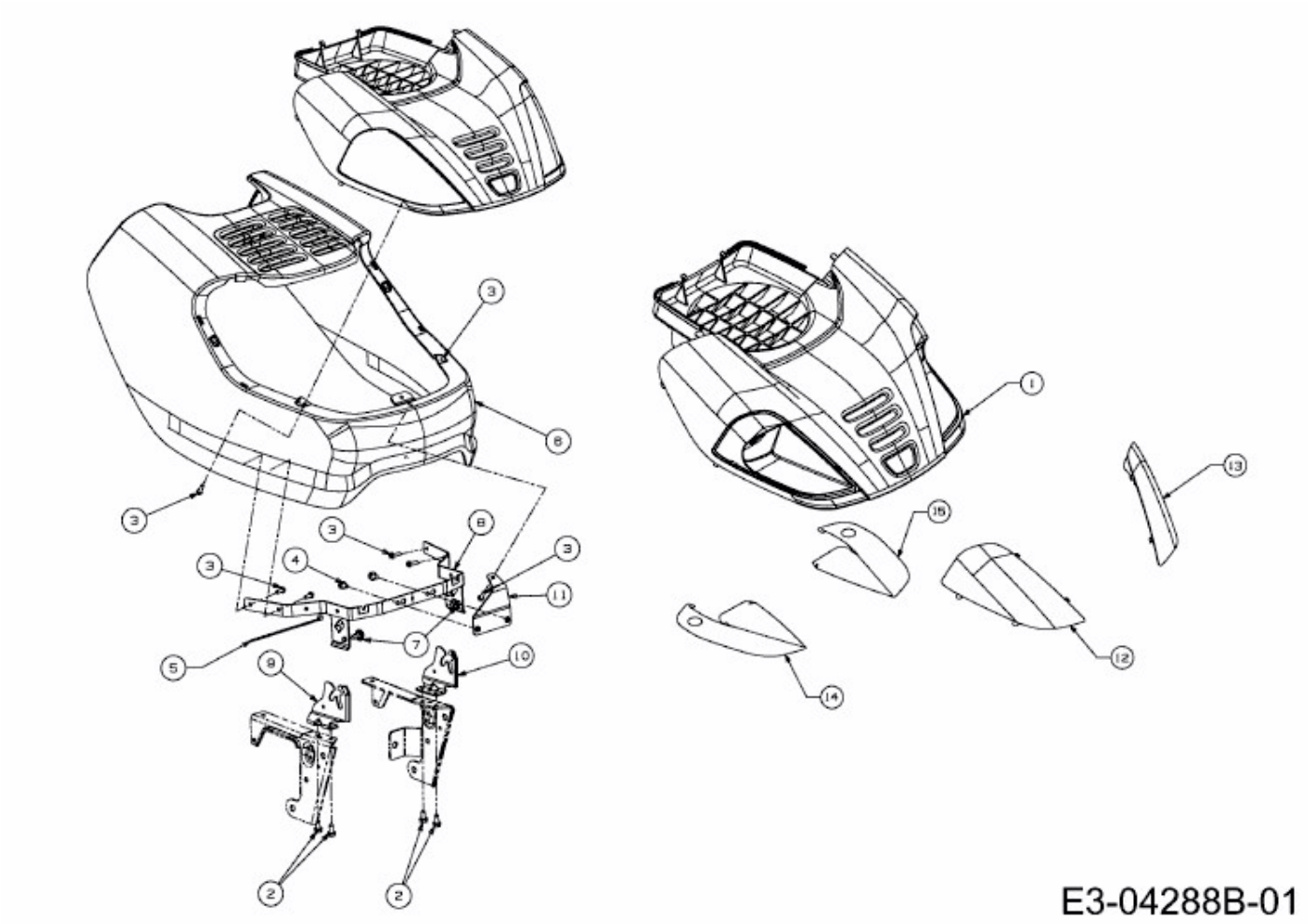I 1050 > 17AF9BKP330 (2011) > MOTORHAUBE C-STYLE