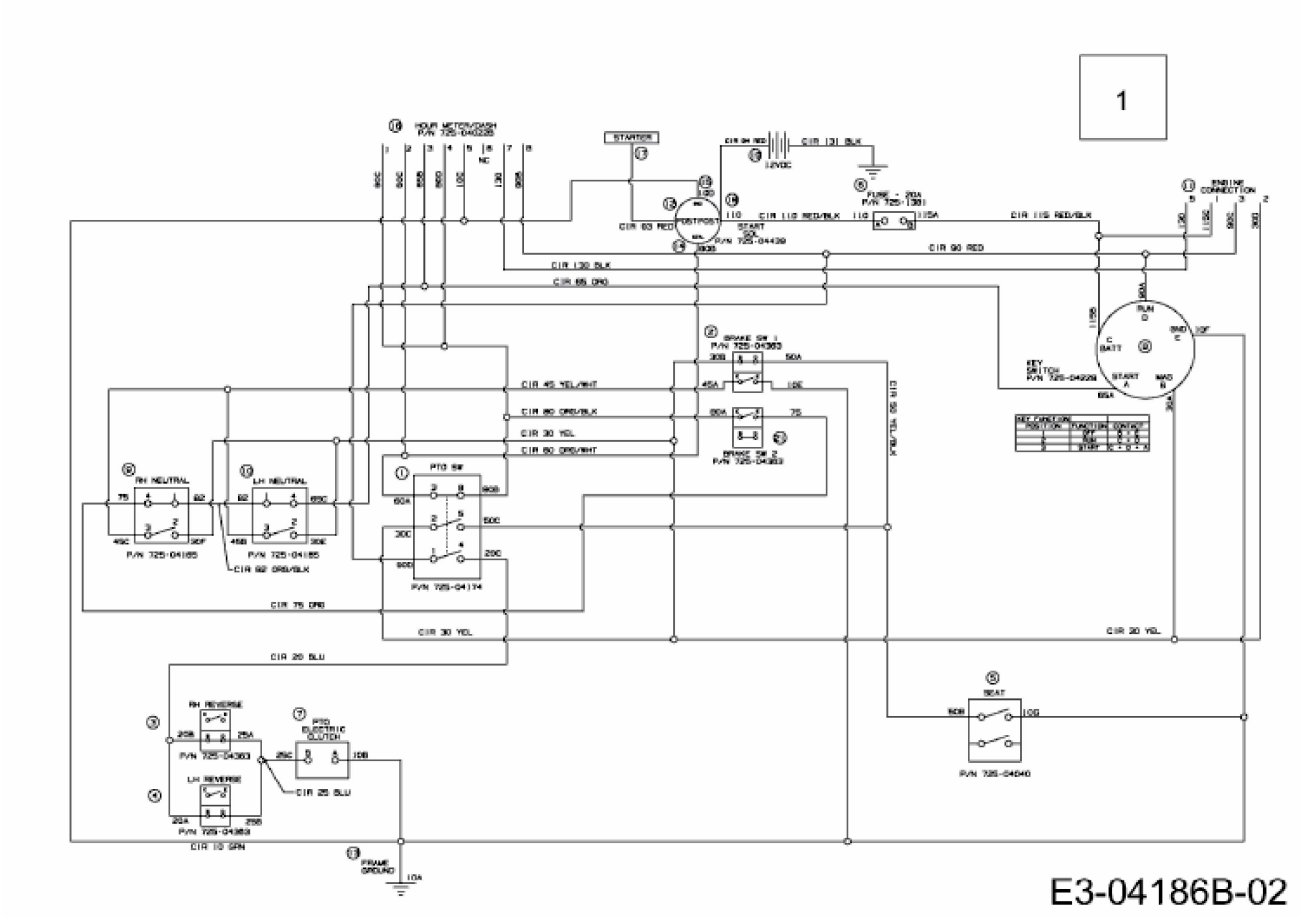P 155 HZ-G > 17AE2ACG678 (2011) > SCHALTPLAN