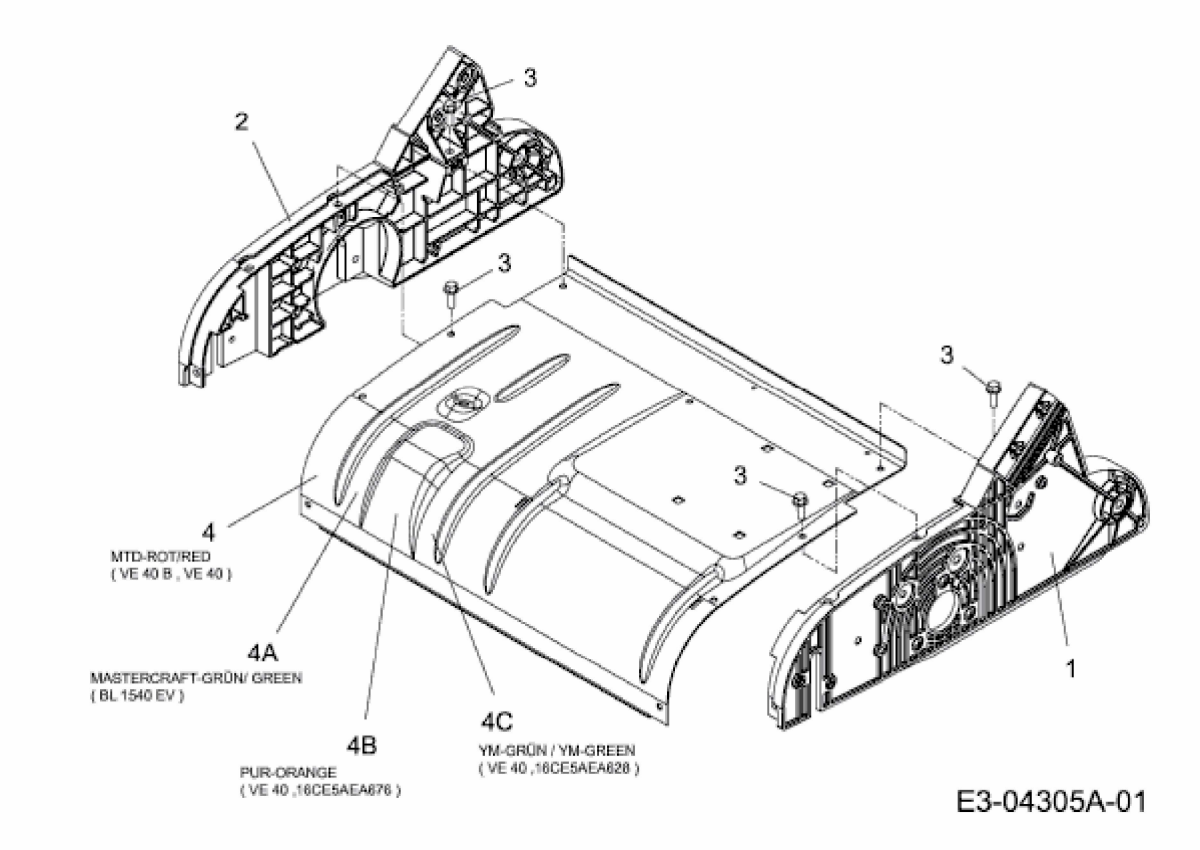
3
2
3
3
3
4
MTD-ROT/RED
(VE 40 B , VE 40)
4A
MASTERCRAFT-GRÜN/ GREEN
(BL 1540 EV)
4B
PUR-ORANGE
(VE 40 ,16CE5AEA676)
4C
YM-GRÜN / YM-GREEN
(VE 40 ,16CE5AEA628)
1
E3-04305A-01