VE 40 > 16CE5AEA628 (2011) > ELEKTROMOTOR, KEILRIEMEN

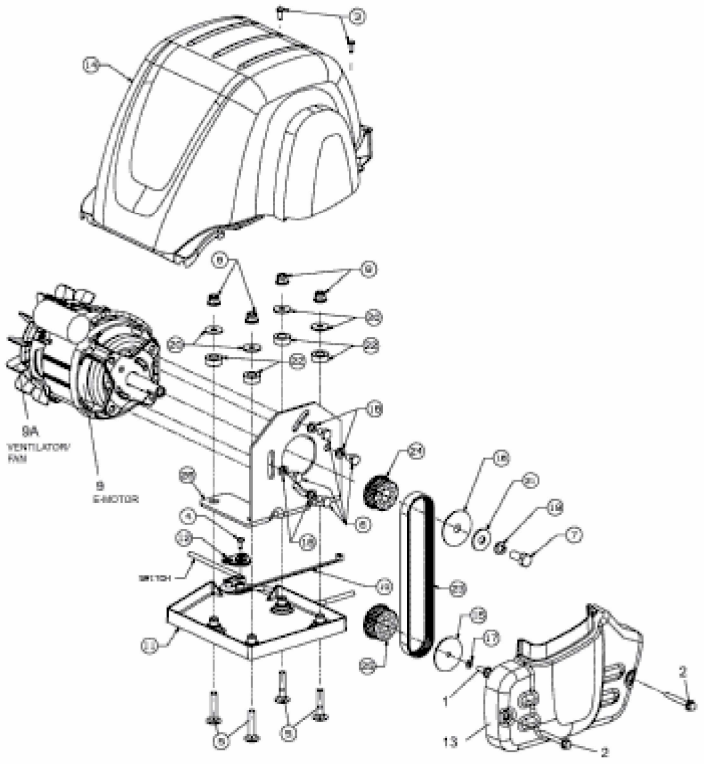


E3-05675A-01