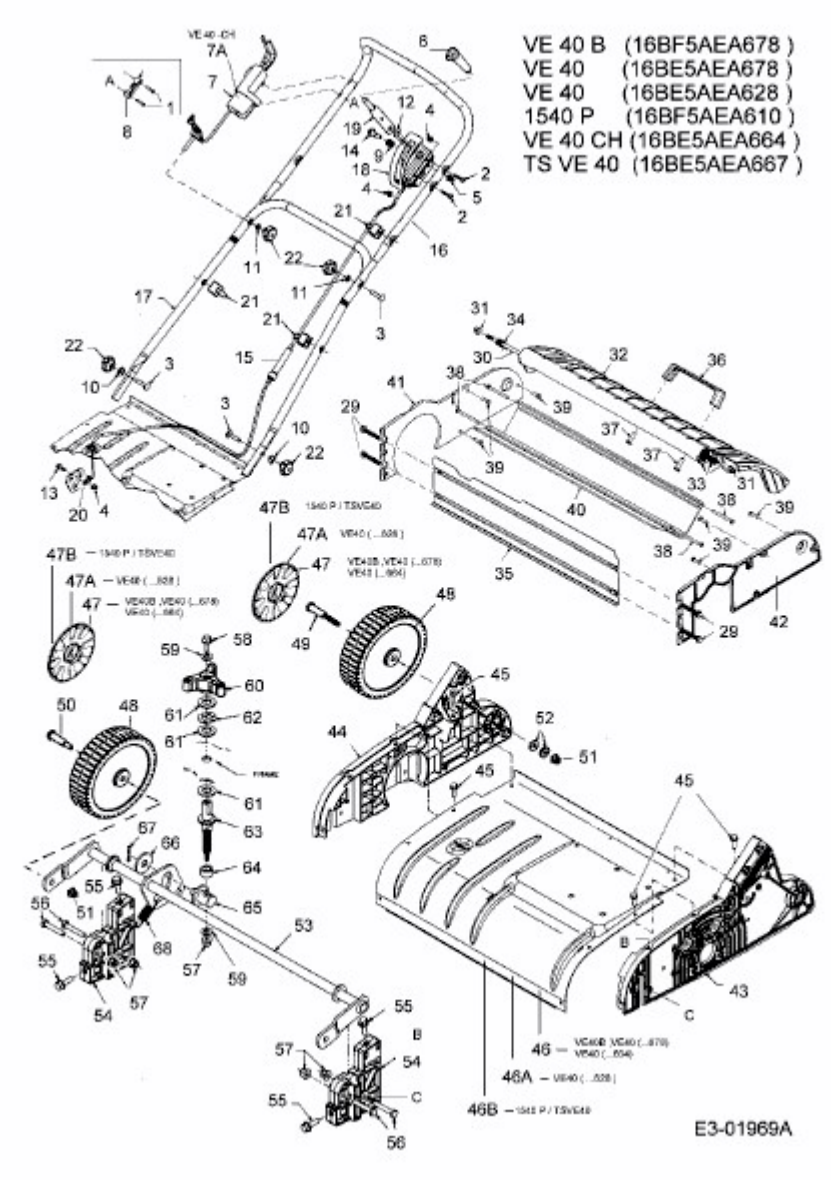1540 P > 16BF5AEA610 (2005) > HOLM