VE 30	16AE11CA800
VE 30 HANSEATIC	16AE11CA821
VE 30 F	16AF11CA821
VE 30 CMI	16AE11CA820
VE 30 CH ,VE 30 B CH	16AE11CA664 ,16AF11CA664
VE 30 COOP	16AE11CA666
VE 30 B	16AF11CA820
OK V 30	16AE11CA667
OK VE 30 B	16AF11CA667
30 VEP GOLF	16AF11CA635
BL 1030 EV	16AF11CA684
BL 1030 EV CH	16AF11CAC84
VE 30	16AE11CA828

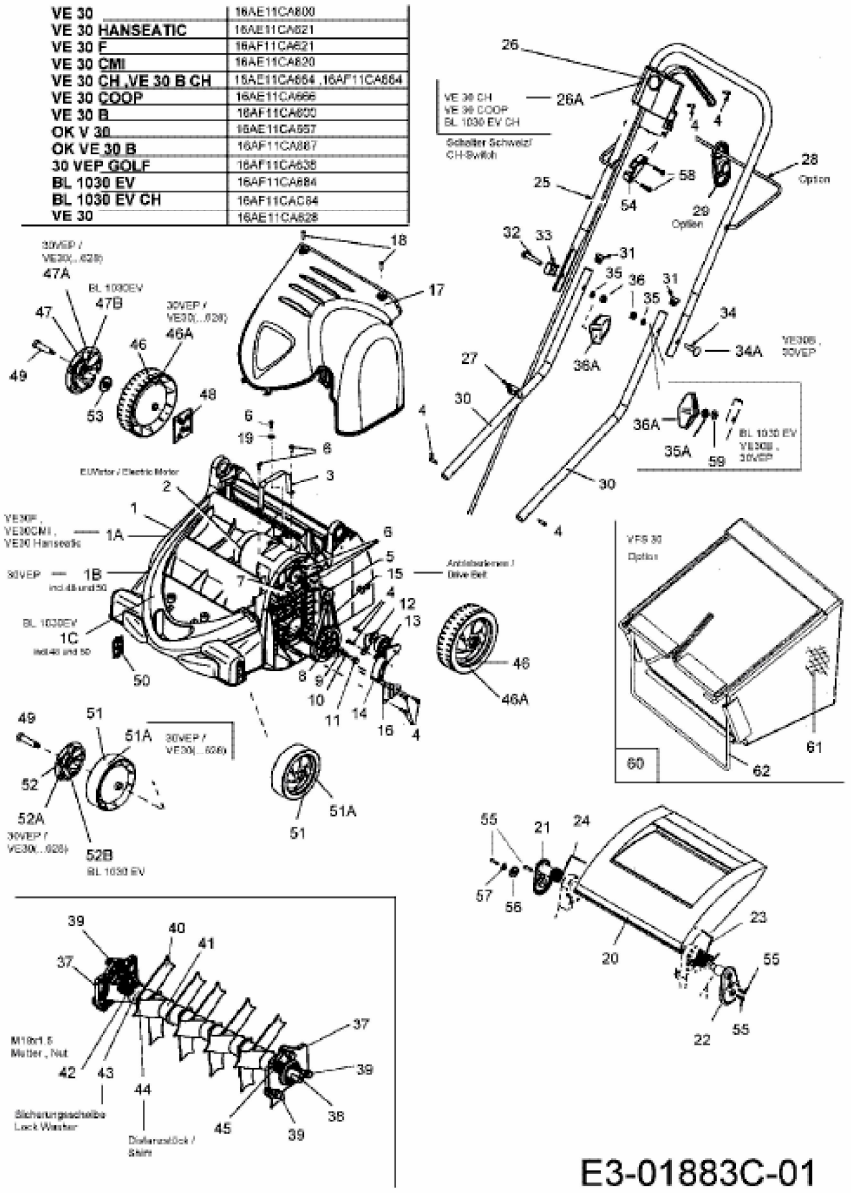

E3-01883C-01