AH 8220 > 14BU804H643 (2003) > SPANNROLLE

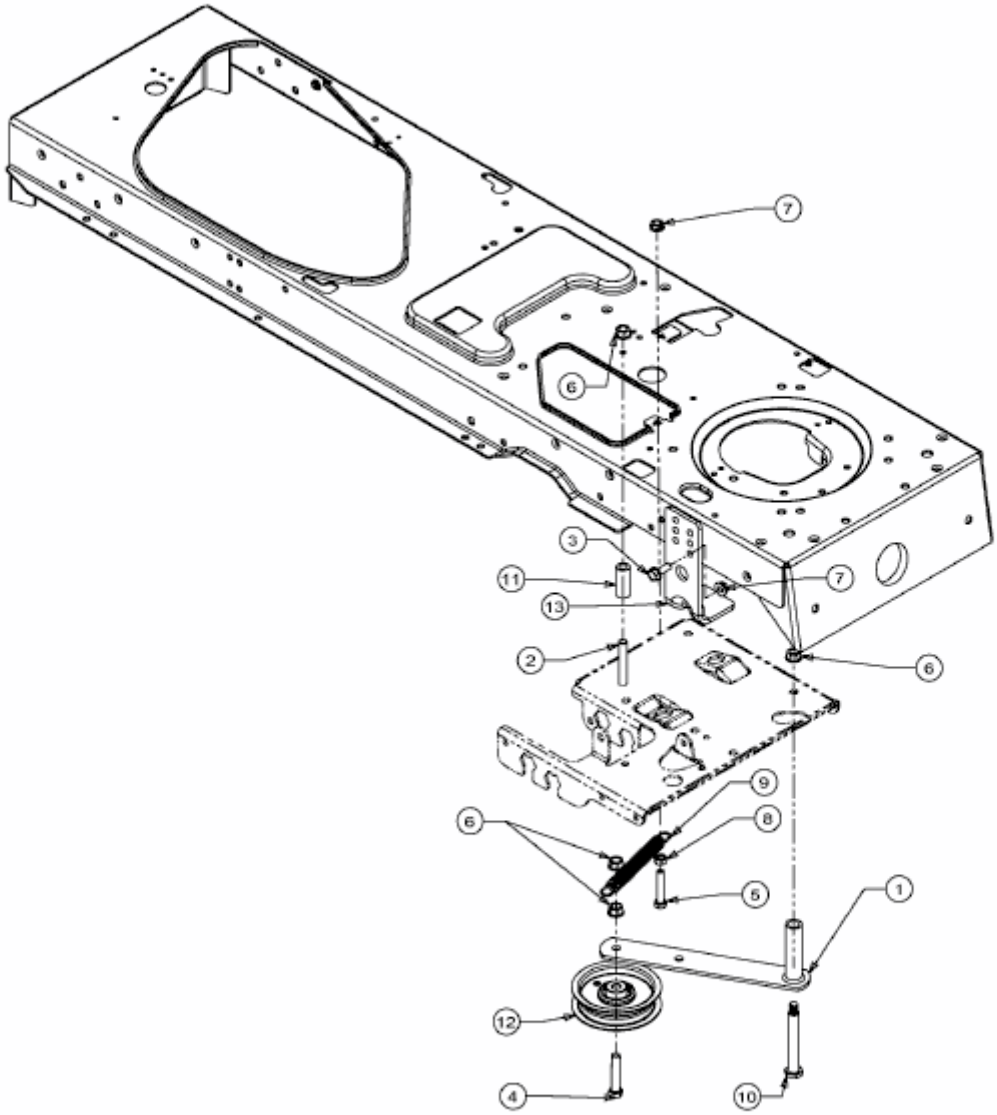

E3-07953A-01