MF 54-25 SD > 14BQ94GK395 (2015) > SCHALTPLAN

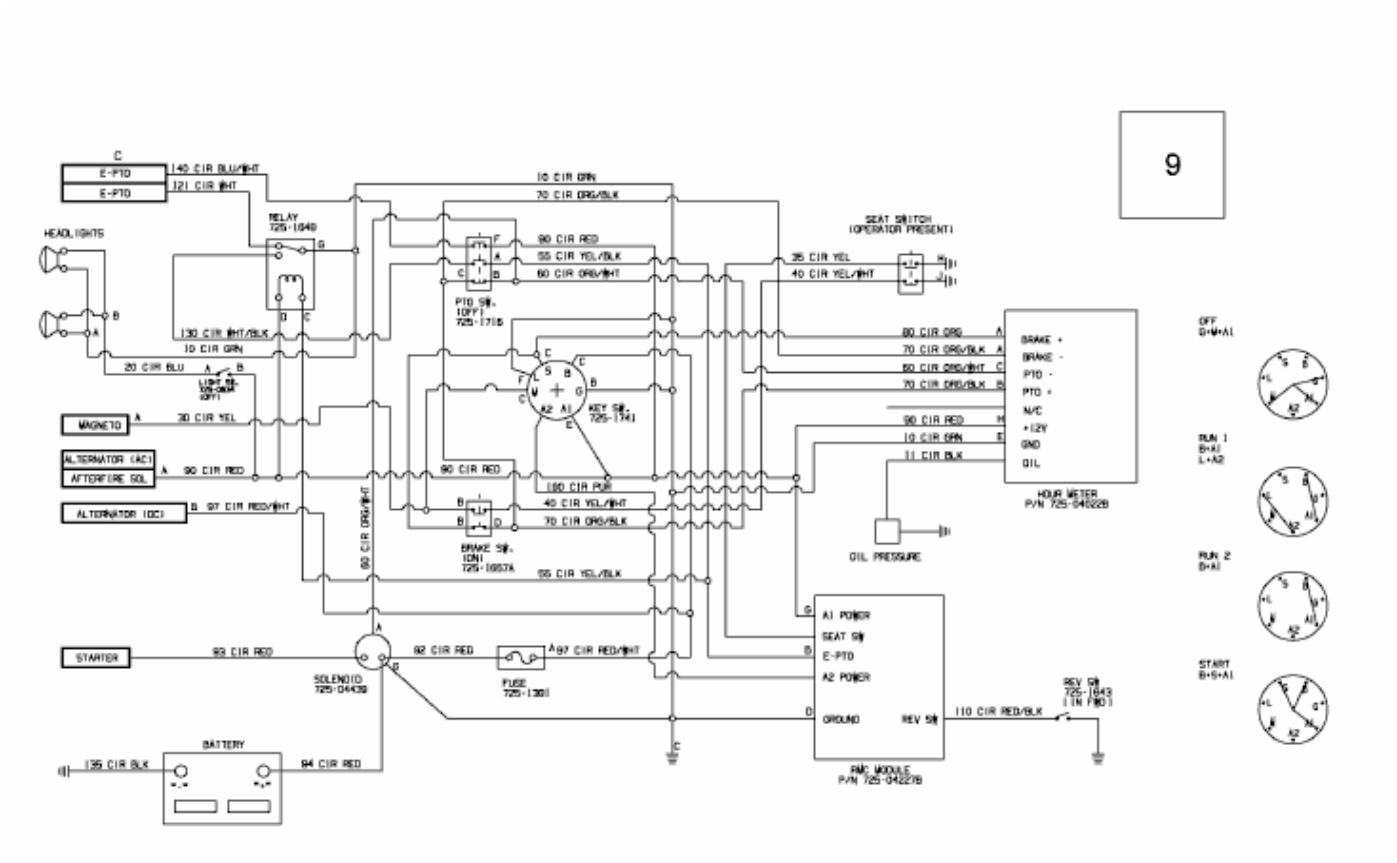

E3-07337C-02