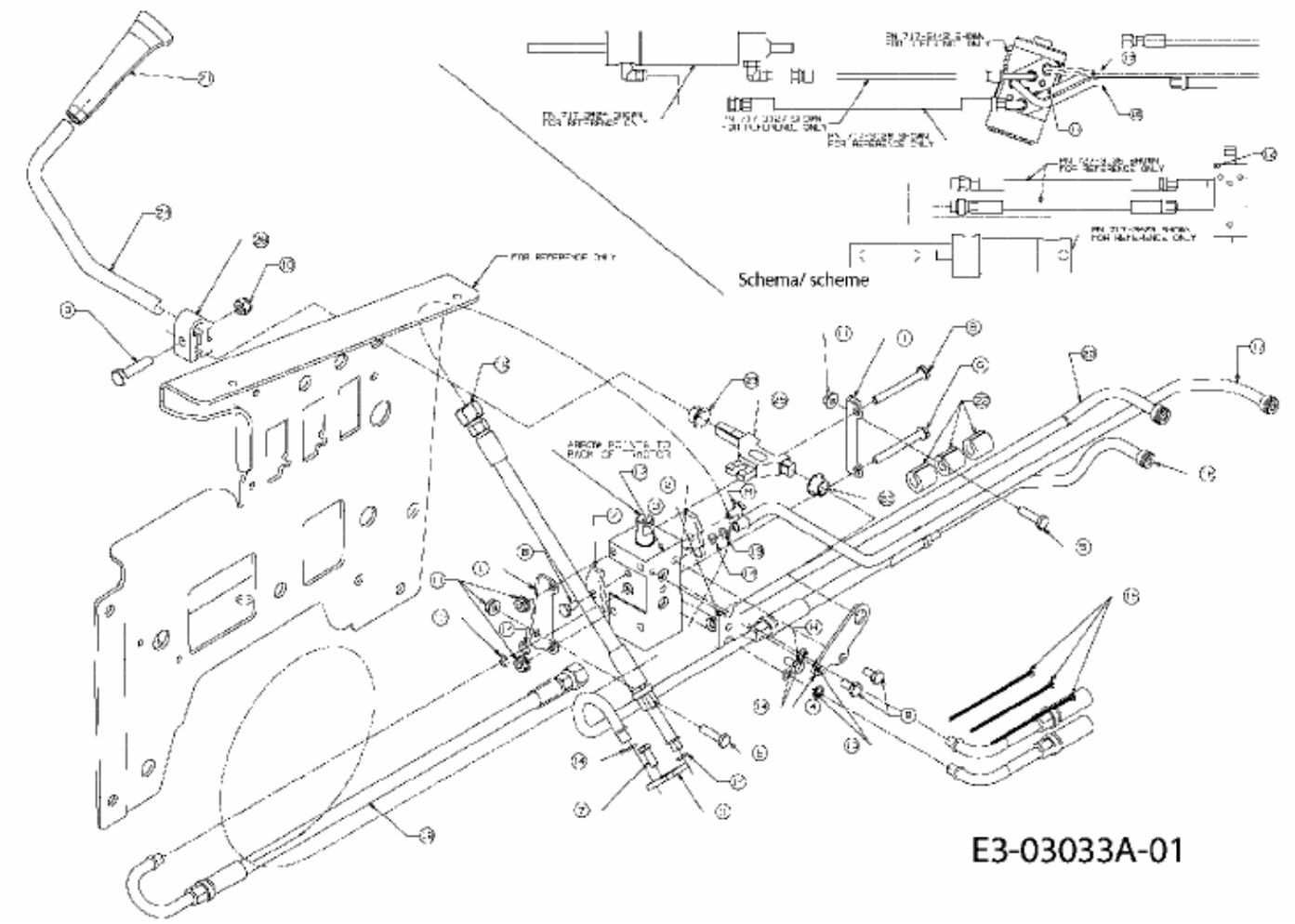MF 21-25 GC > 14B-692-695 (2007) > HYDRAULIK