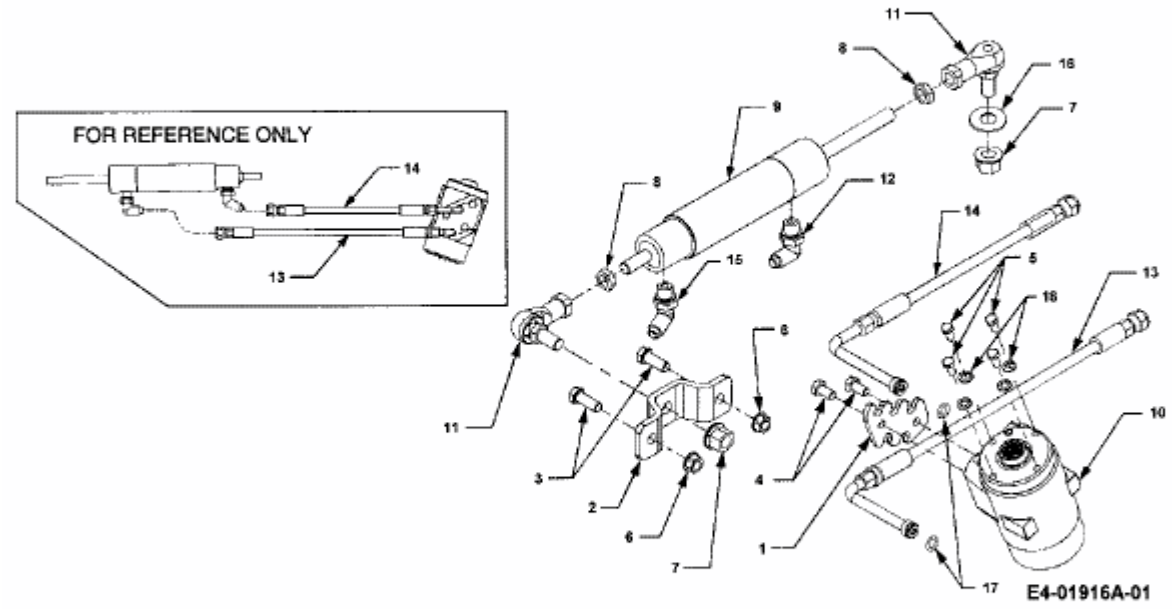
FOR REFERENCE ONLY
E4-01916A-01