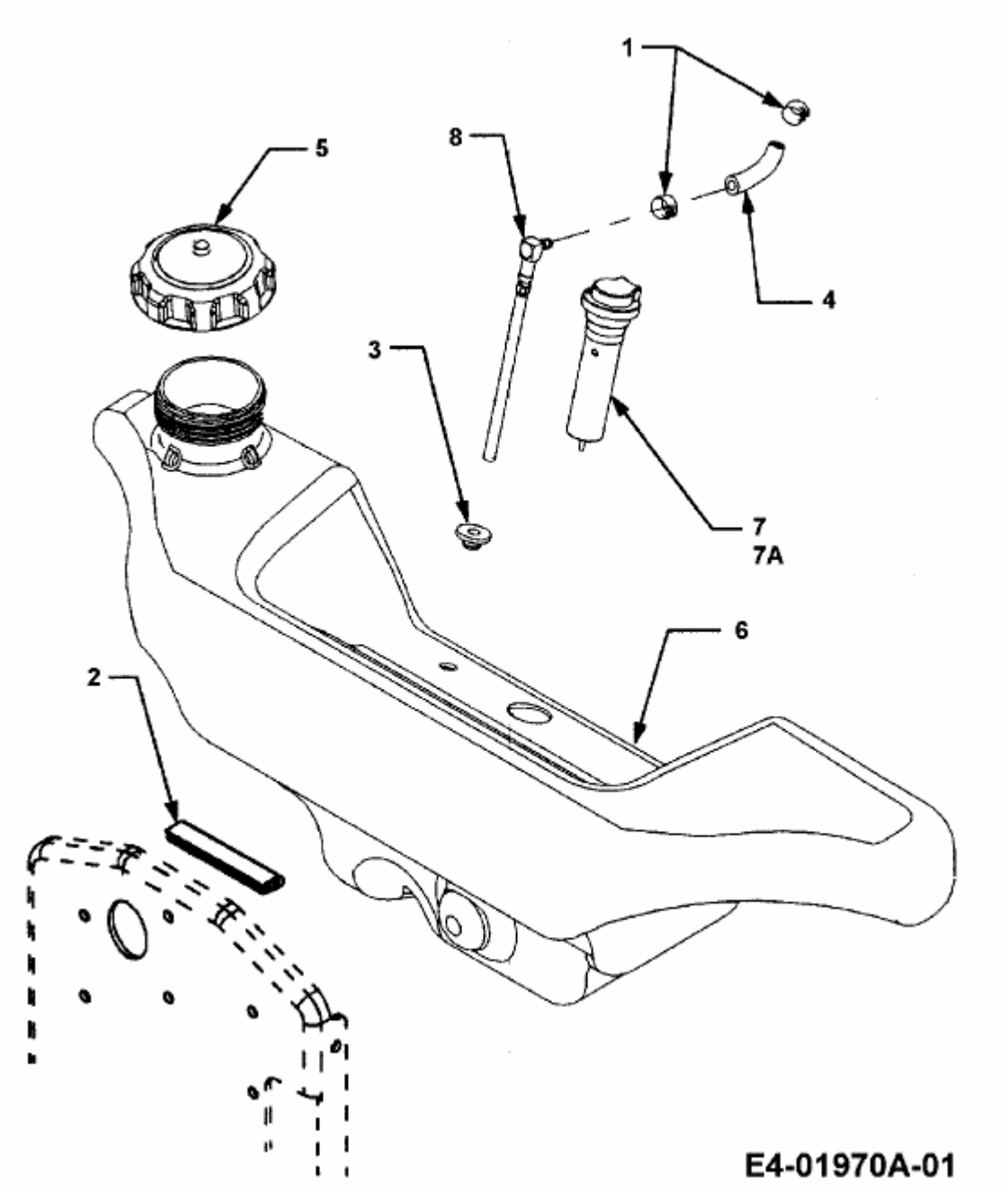14A-676-603 (1999) > TANK