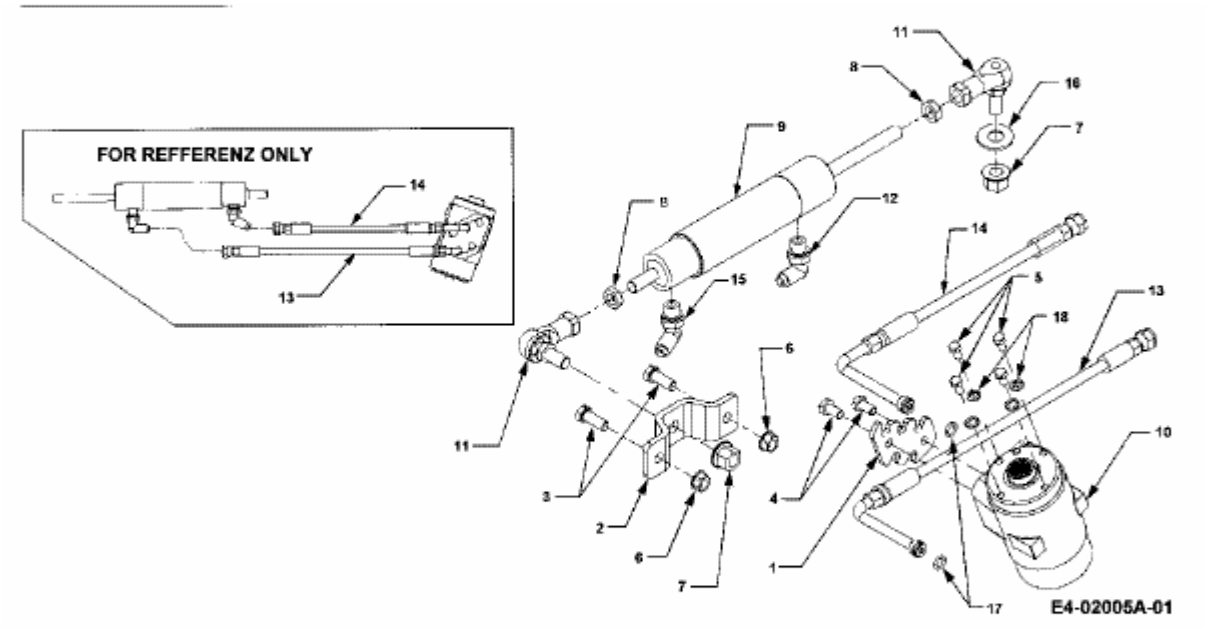
FOR REFFERENZ ONLY
14
13
11
8
16
7
9
12
8
15
14
5
13
18
6
11
10
3
4
2
6
1
7
17
E4-02005A-01