Models 844 and 845

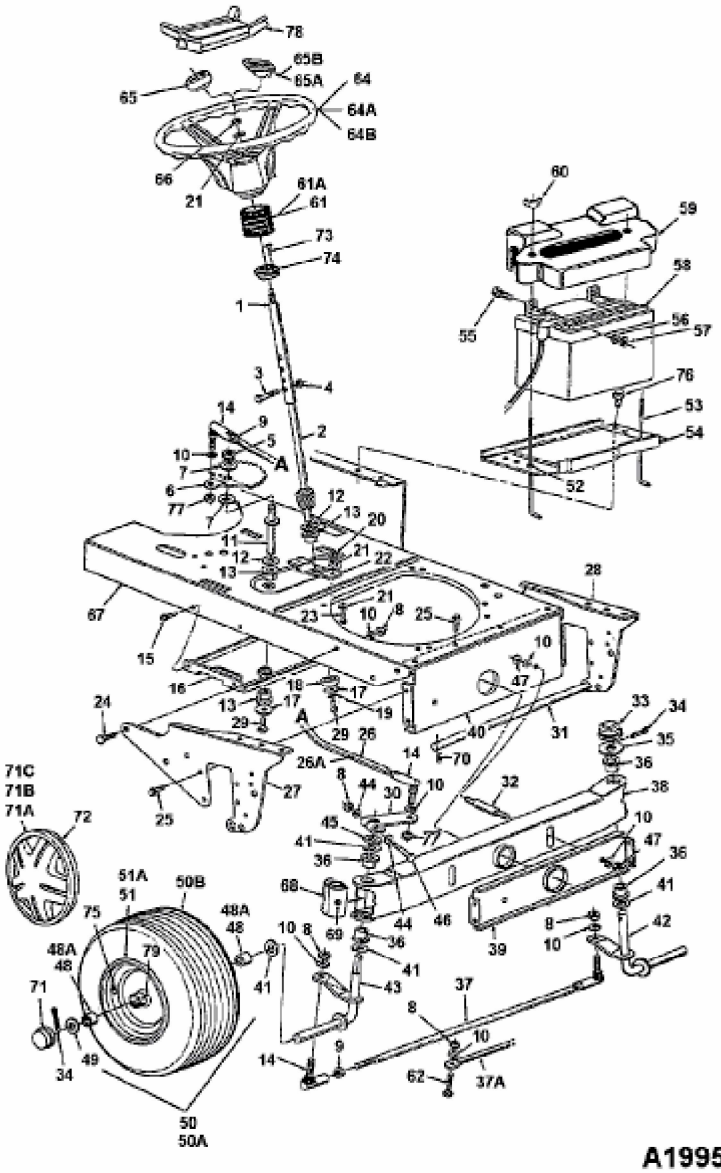

fig