Models 760 thru 769

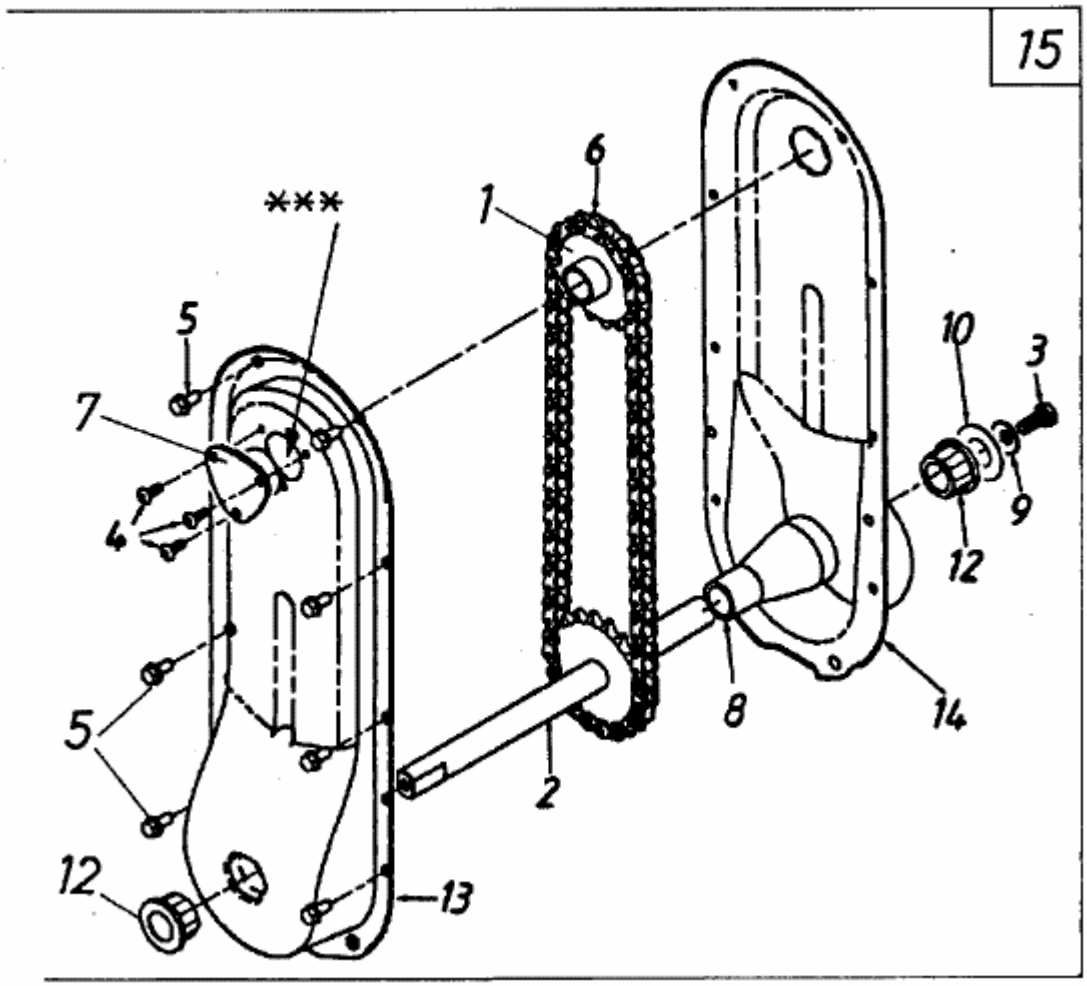

E3-01312 A