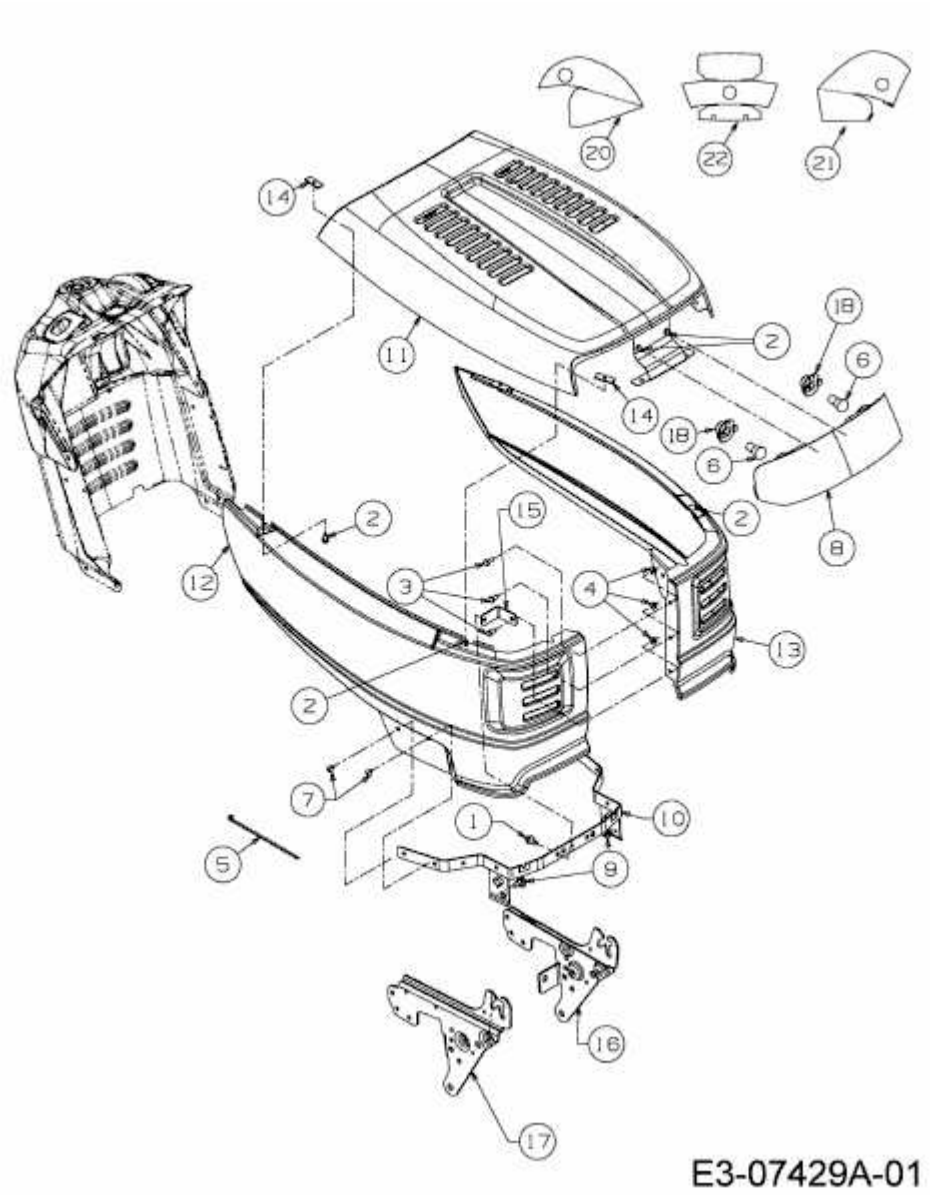RT 155-92 H > 13WM77TE694 (2016) > MOTORHAUBE T-STYLE