AMBITION 107.175 H > 13TN79RG650 (2011) > MOTORHAUBE R-STYLE

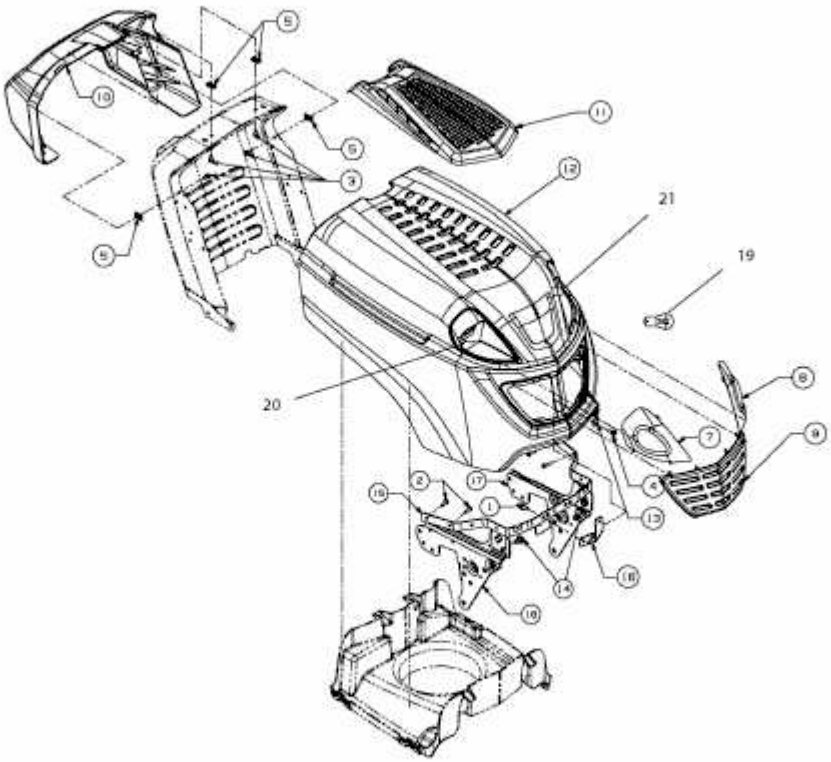

E3-06636A-01