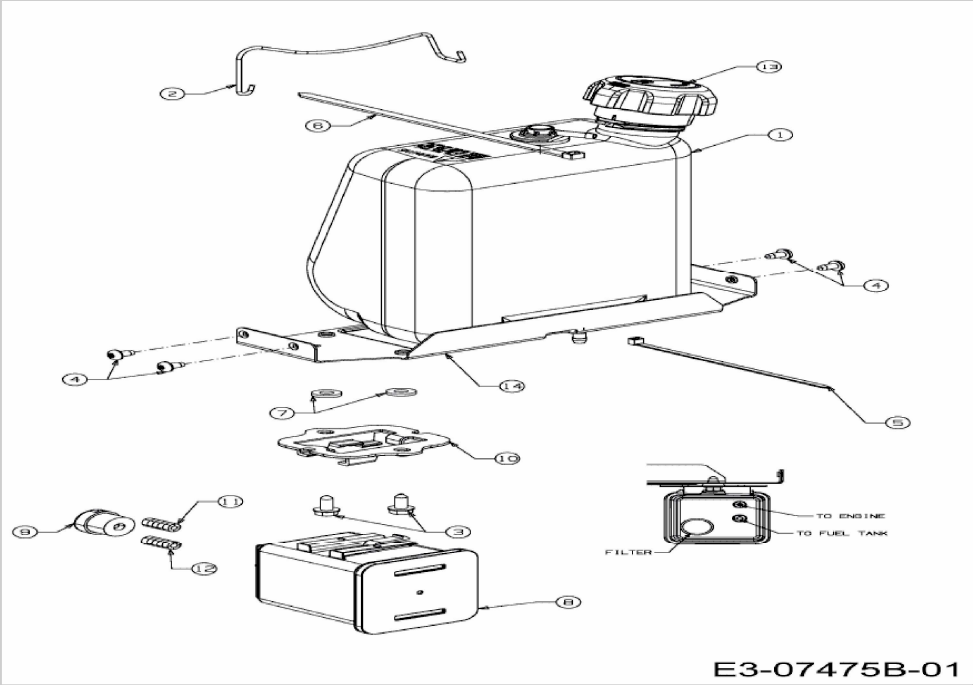BLUE POWER 105.200 H > 13RT71RN650 (2014) > TANK