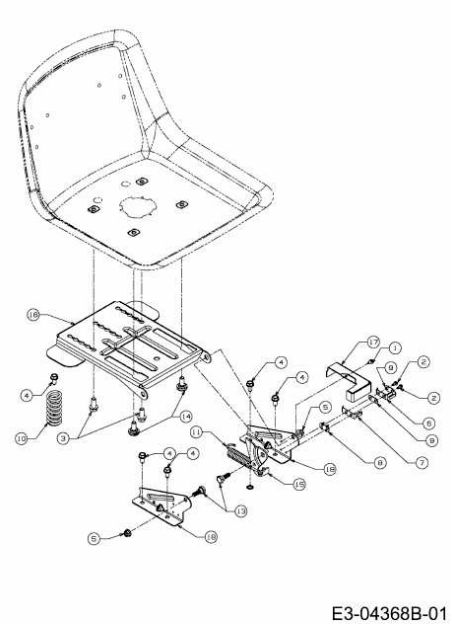
E3-04368B-01