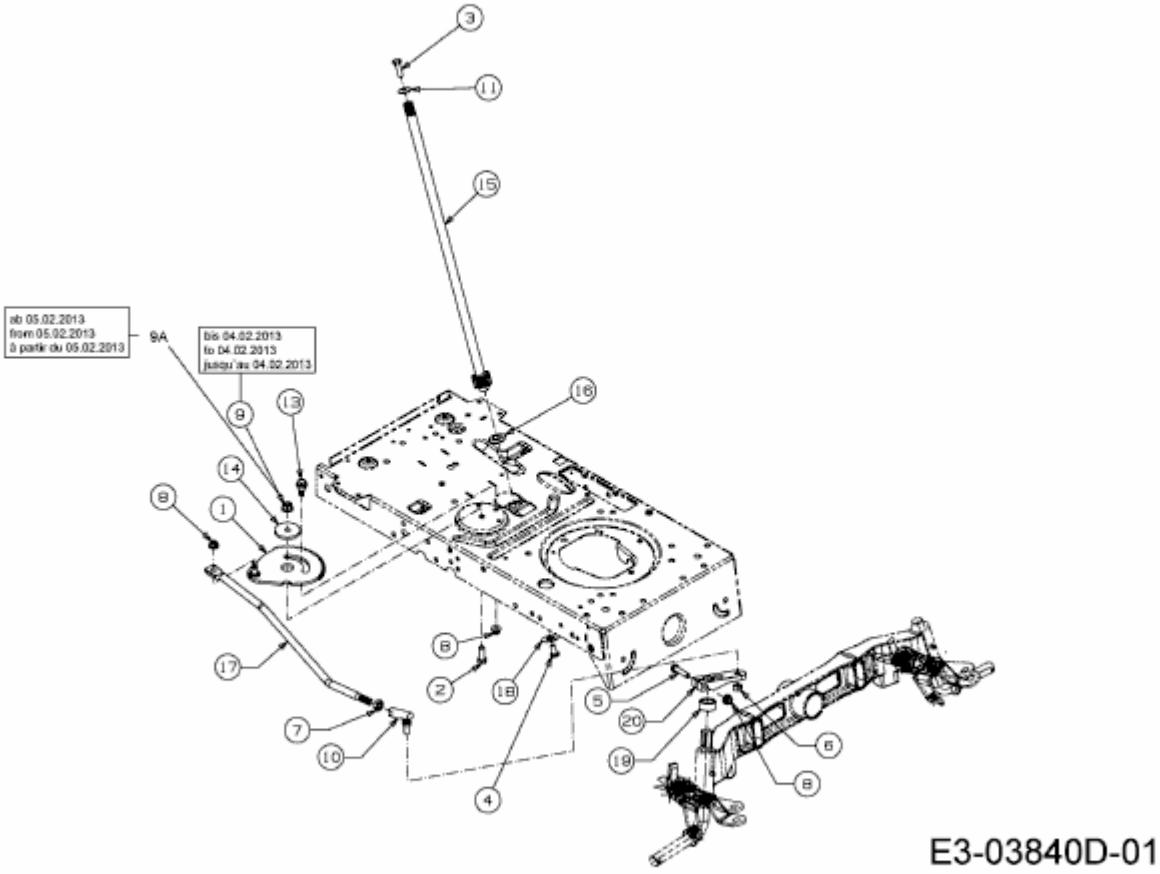AMBITION 105.175 H > 13RN71RN650 (2013) > LENKUNG