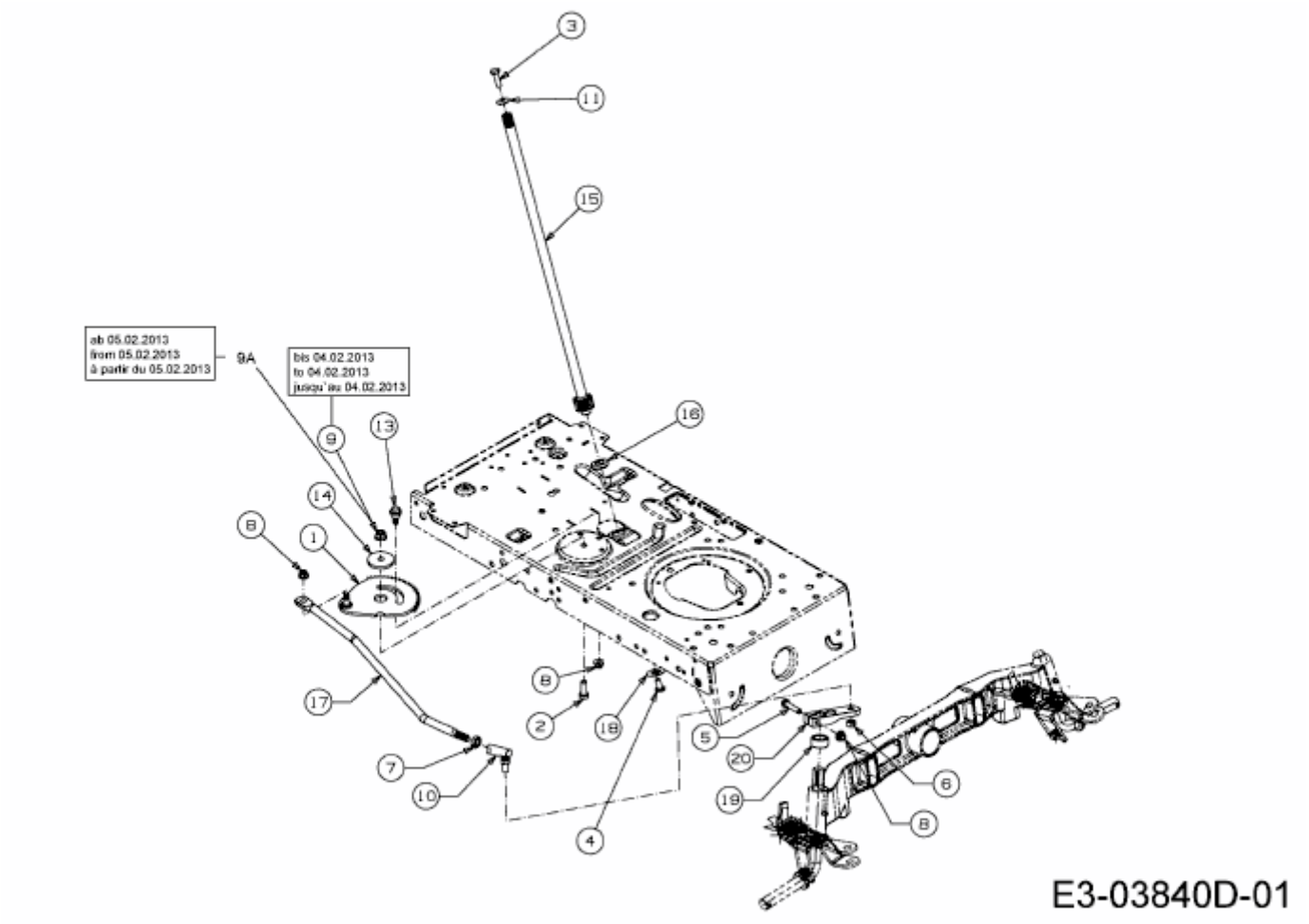SELECT 105.155 T > 13RM77RN650 (2013) > LENKUNG