LE 155 H > 13RM713E678 (2012) > SCHALTPLAN

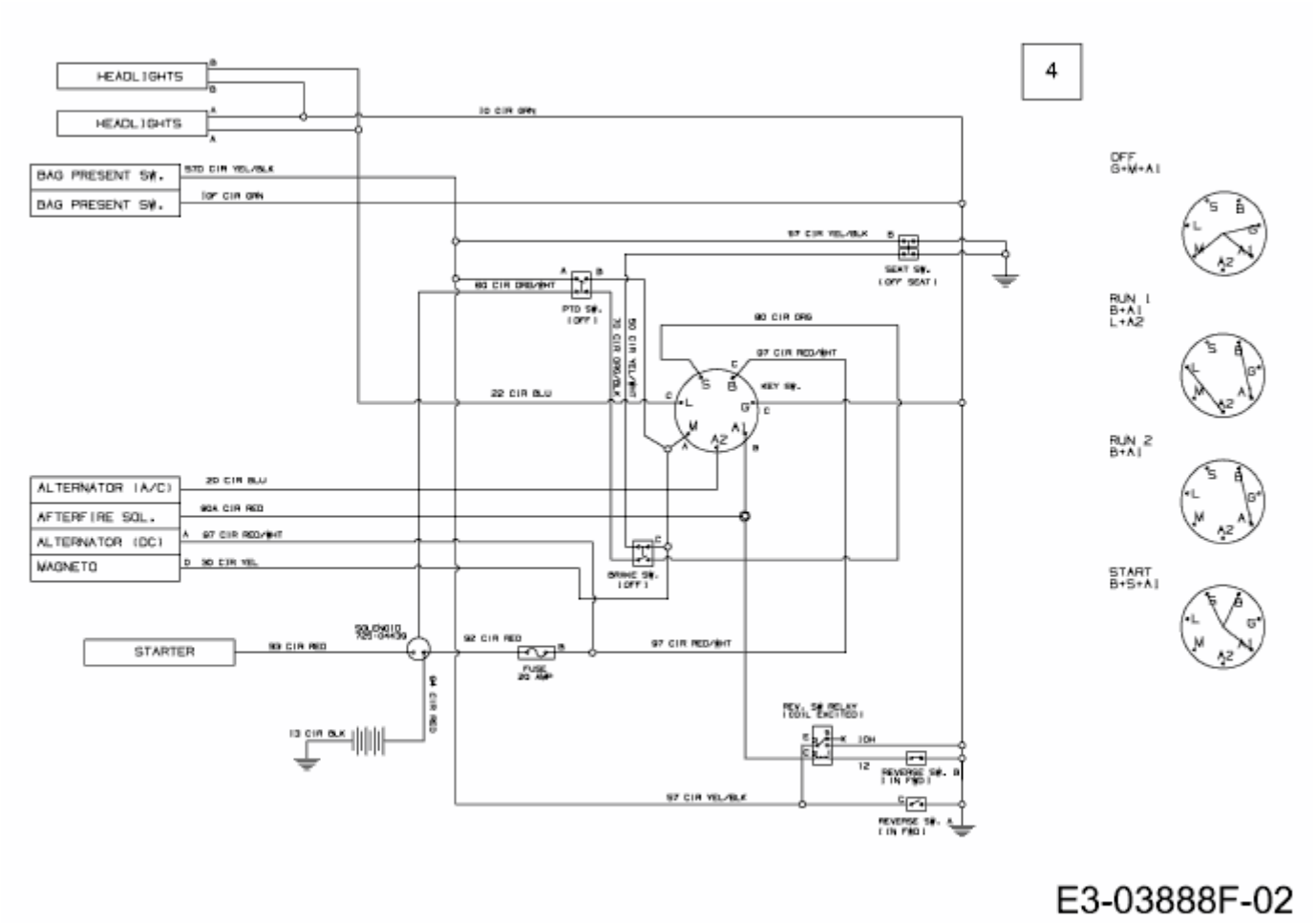

E3-03888F-02