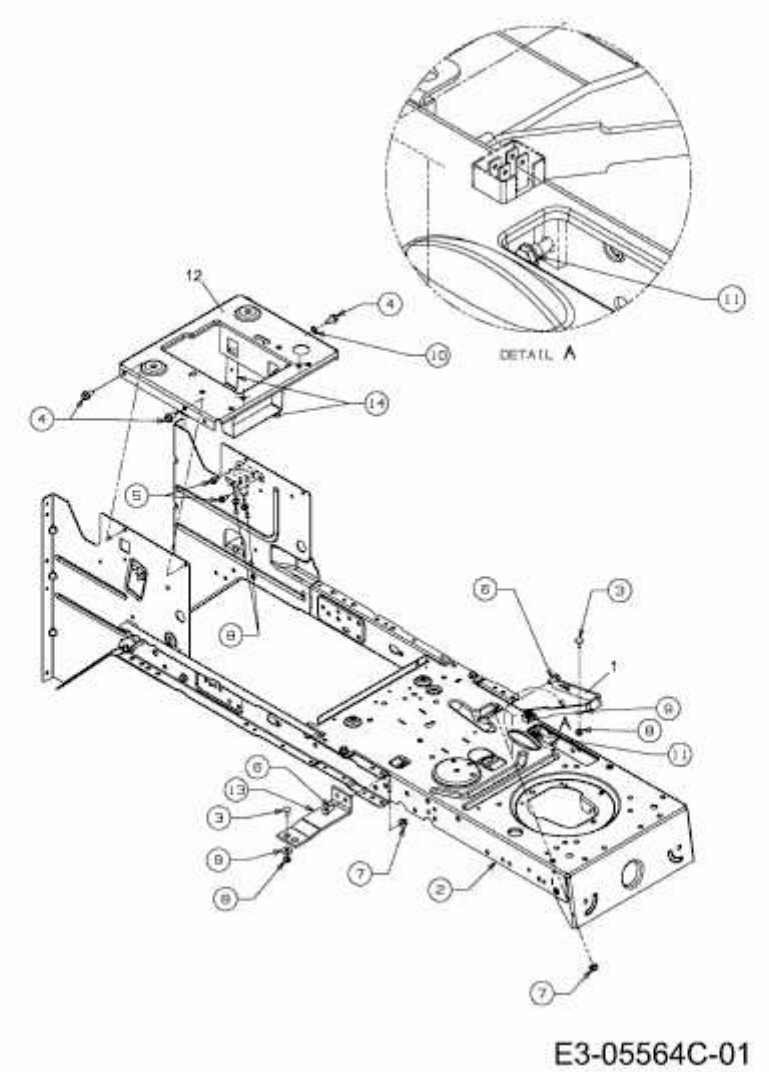AMBITION 92.130 H > 13RH71RE650 (2013) > RAHMEN