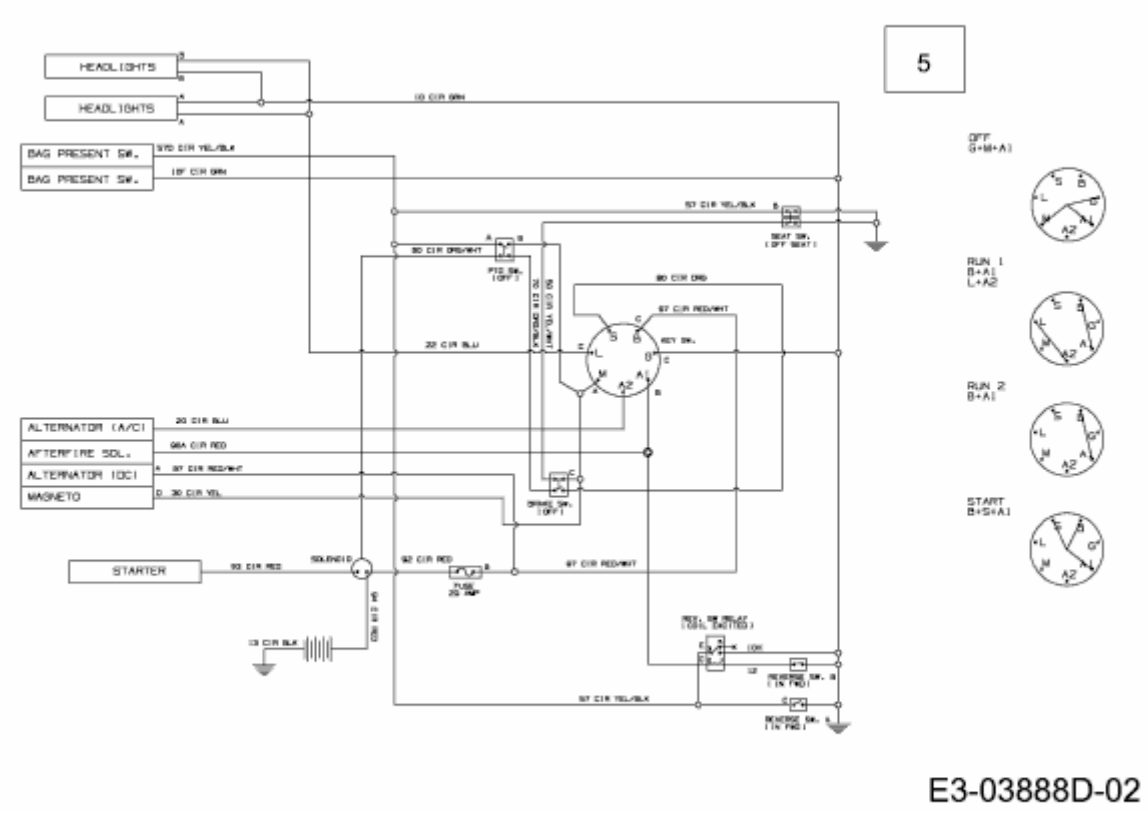AMBITION 76.125 H > 13RH71RA650 (2011) > SCHALTPLAN