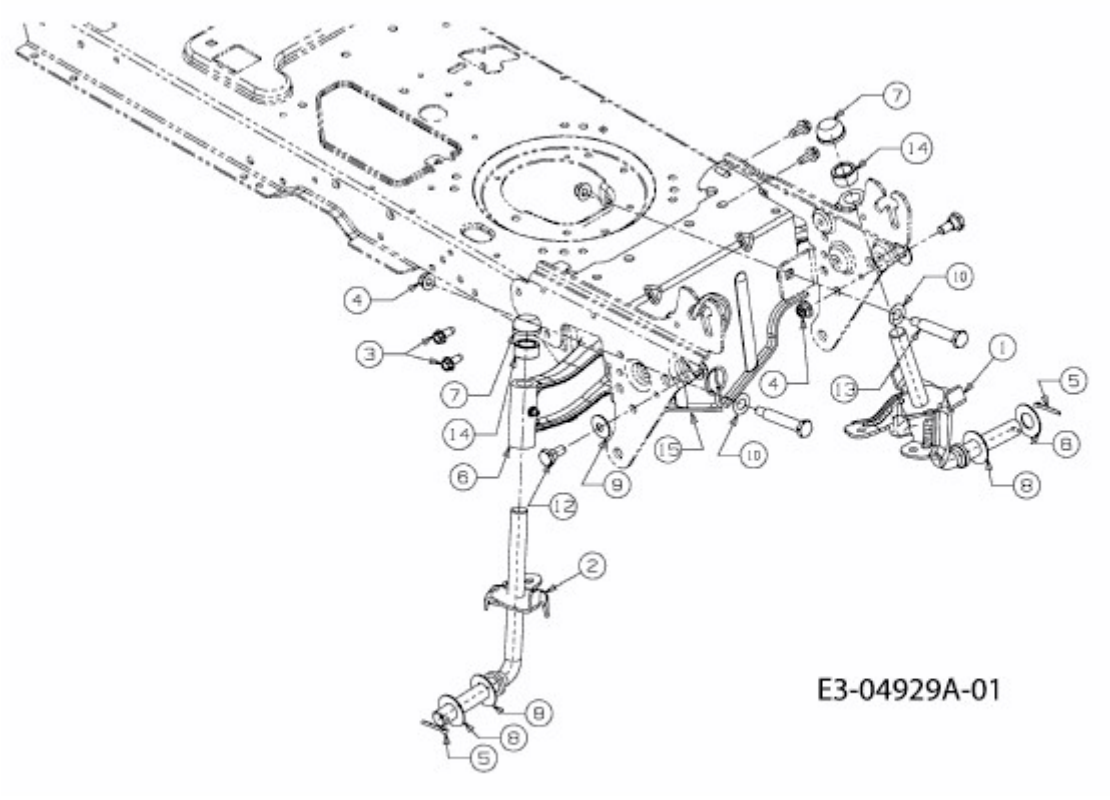CC 1024 RD-J > 13MI51AJ403 (2011) > VORDERACHSE