EXPERT 122.240 H > 13II91WJ650 (2015) > VORDERACHSE

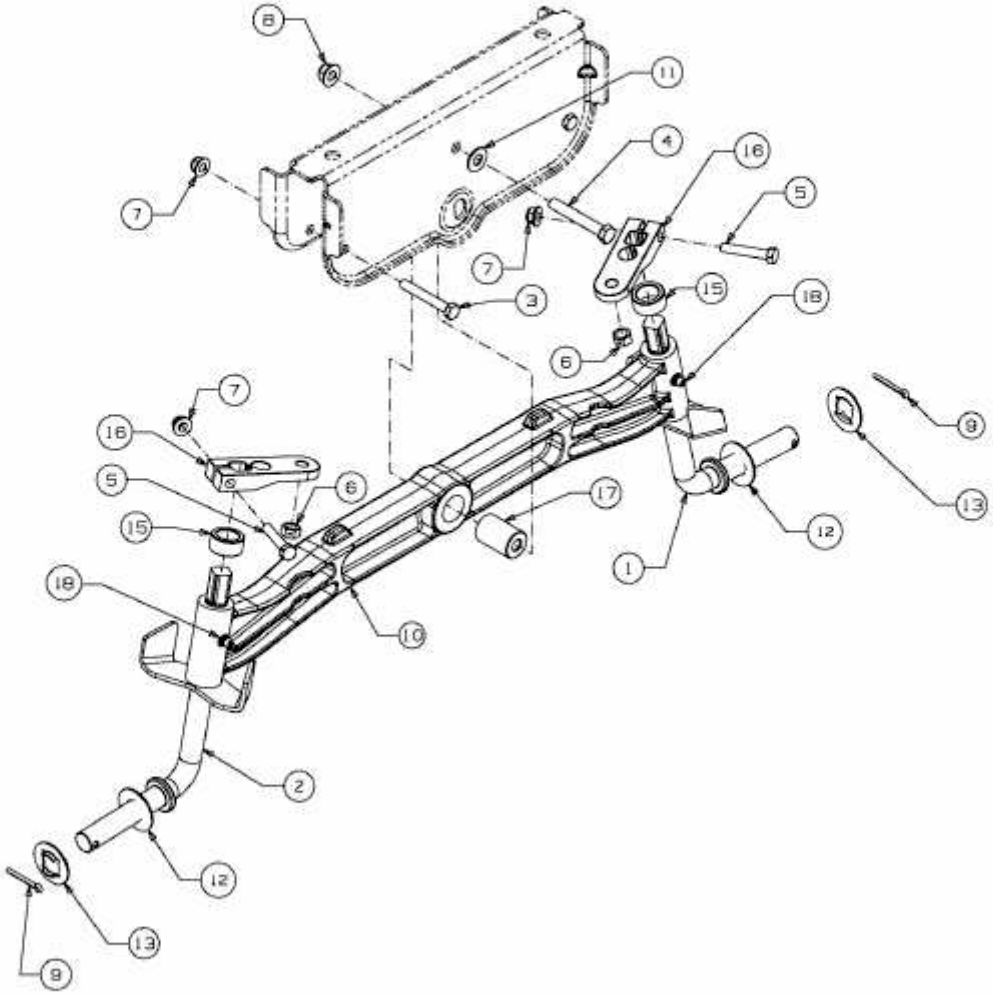

E3-07523C-01