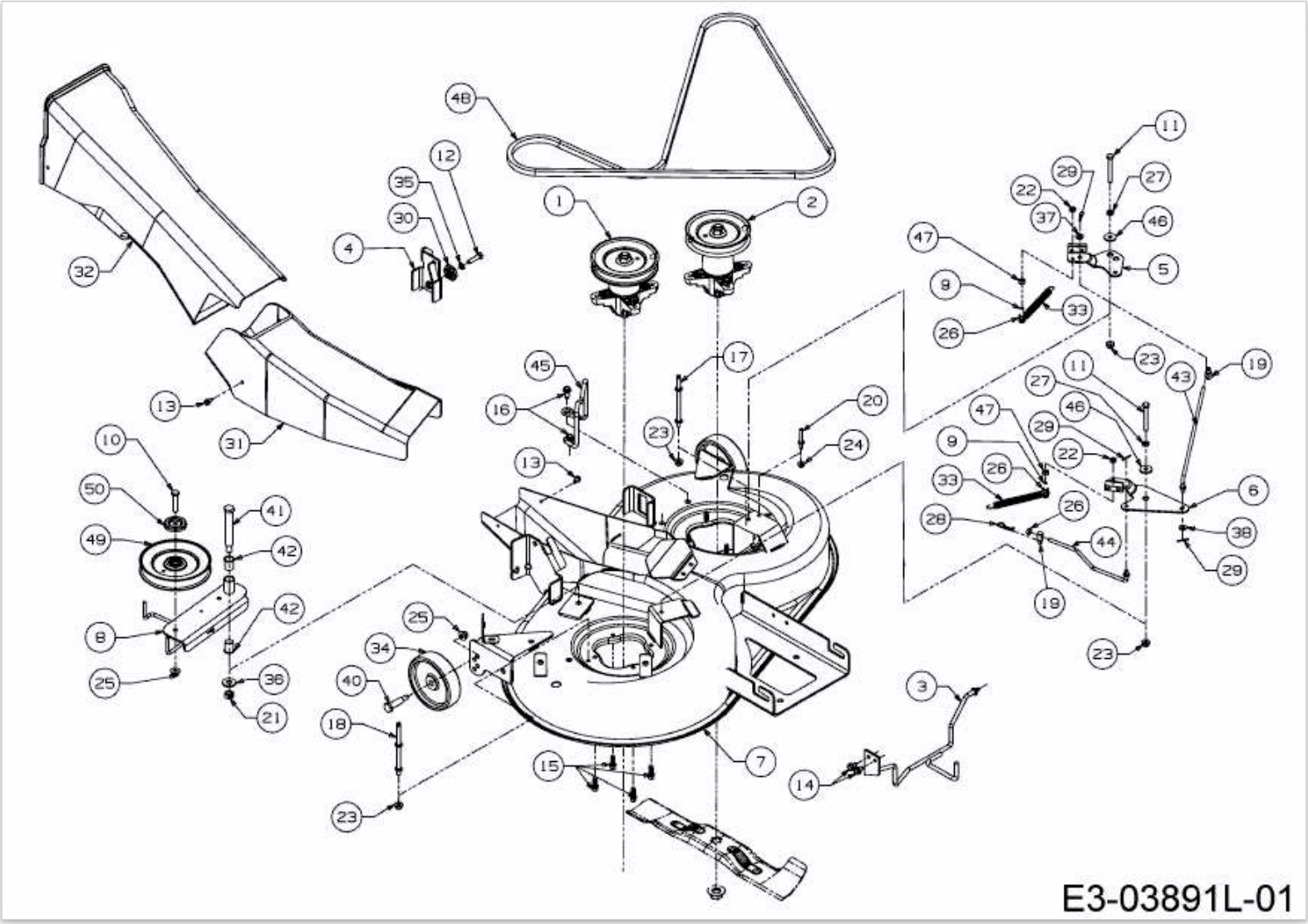E 13/92 T > 13I2765E650 (2018) > MÄHWERK E (36"/92CM)