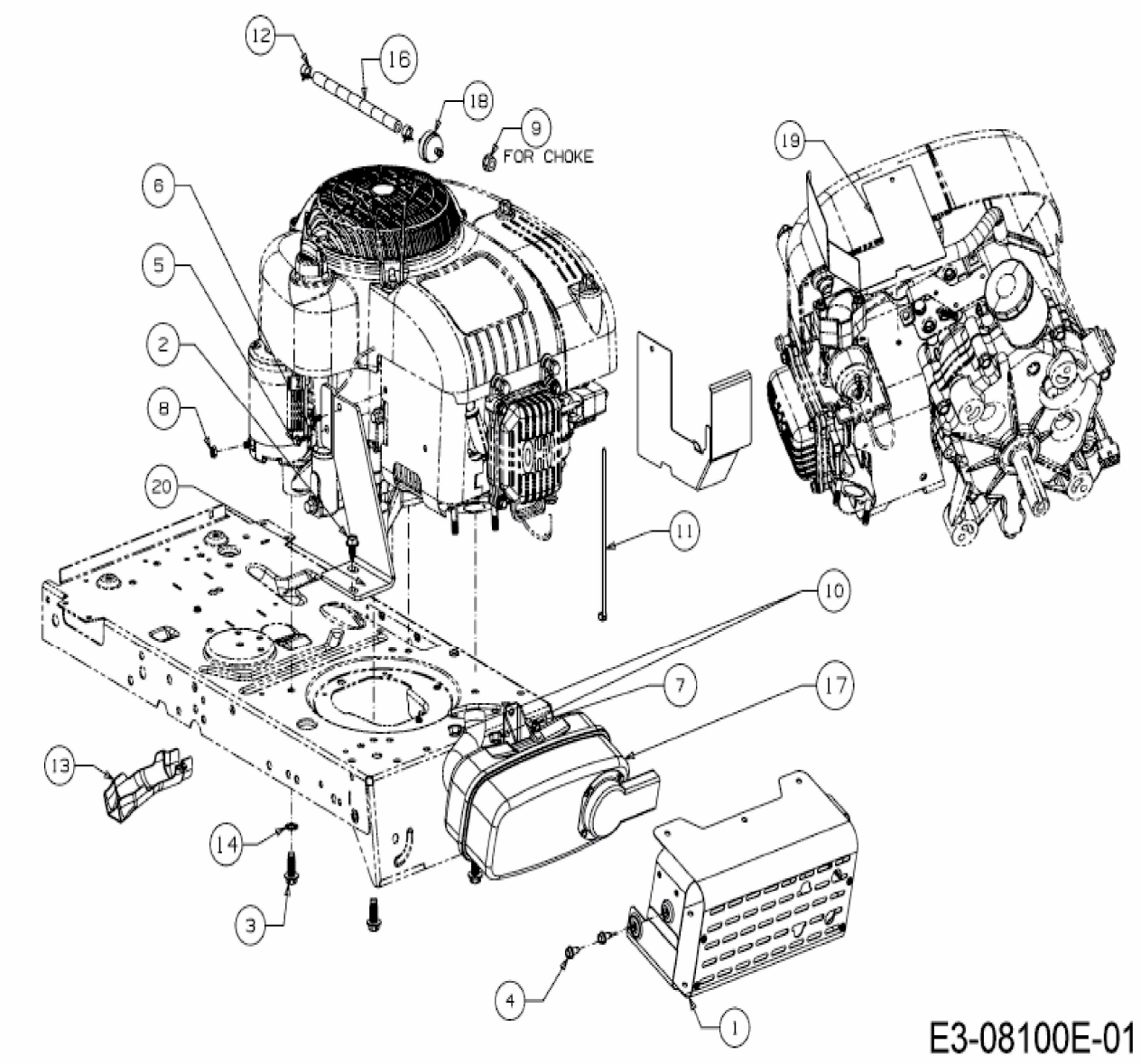
12
16
18
9
FOR CHOKE
19
6
5
2
8
20
11
10
7
17
13
14
3
4
1
E3-08100E-01