272-105 TWINH > 13HU99GN615 (2016) > VORDERACHSE

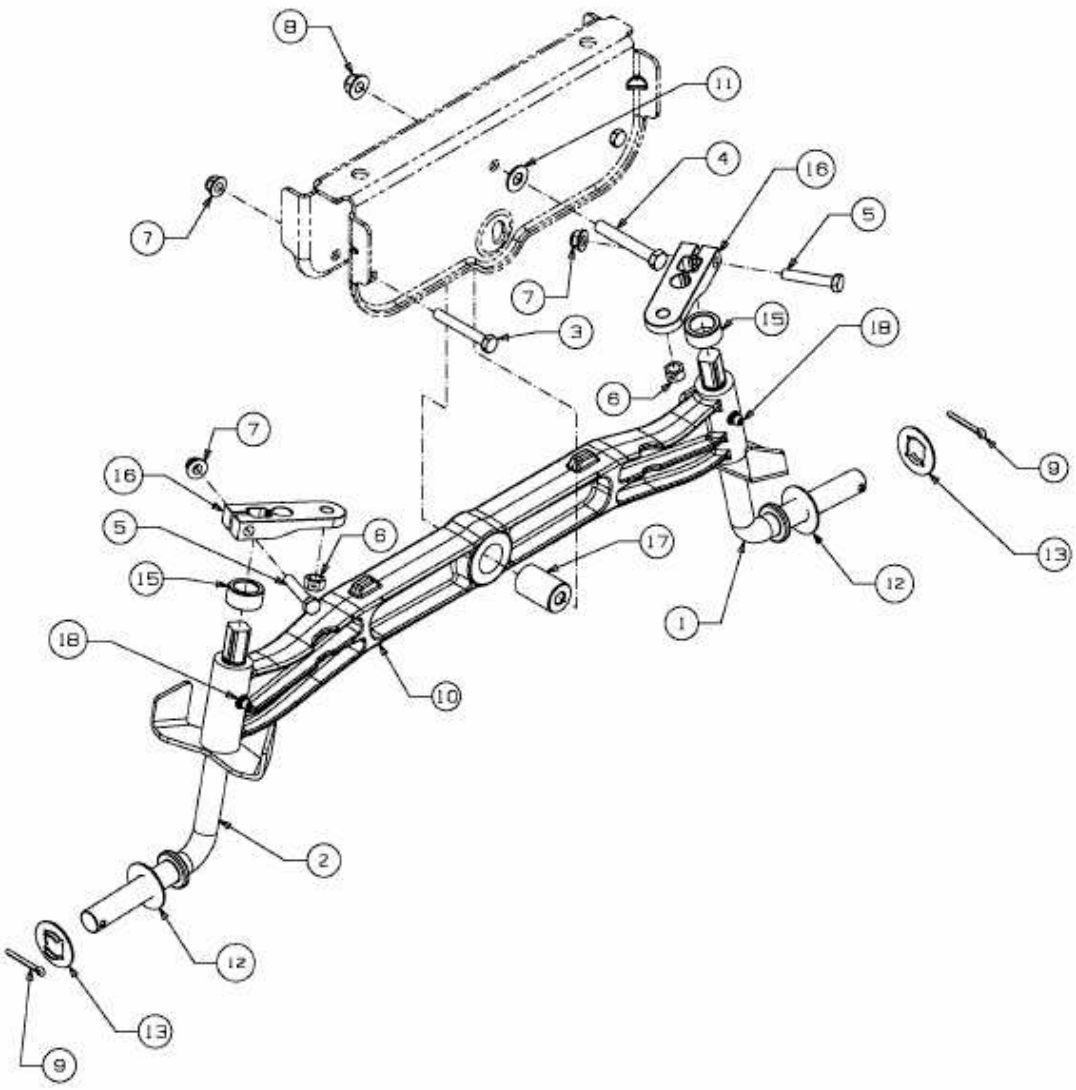

E3-07523C-01