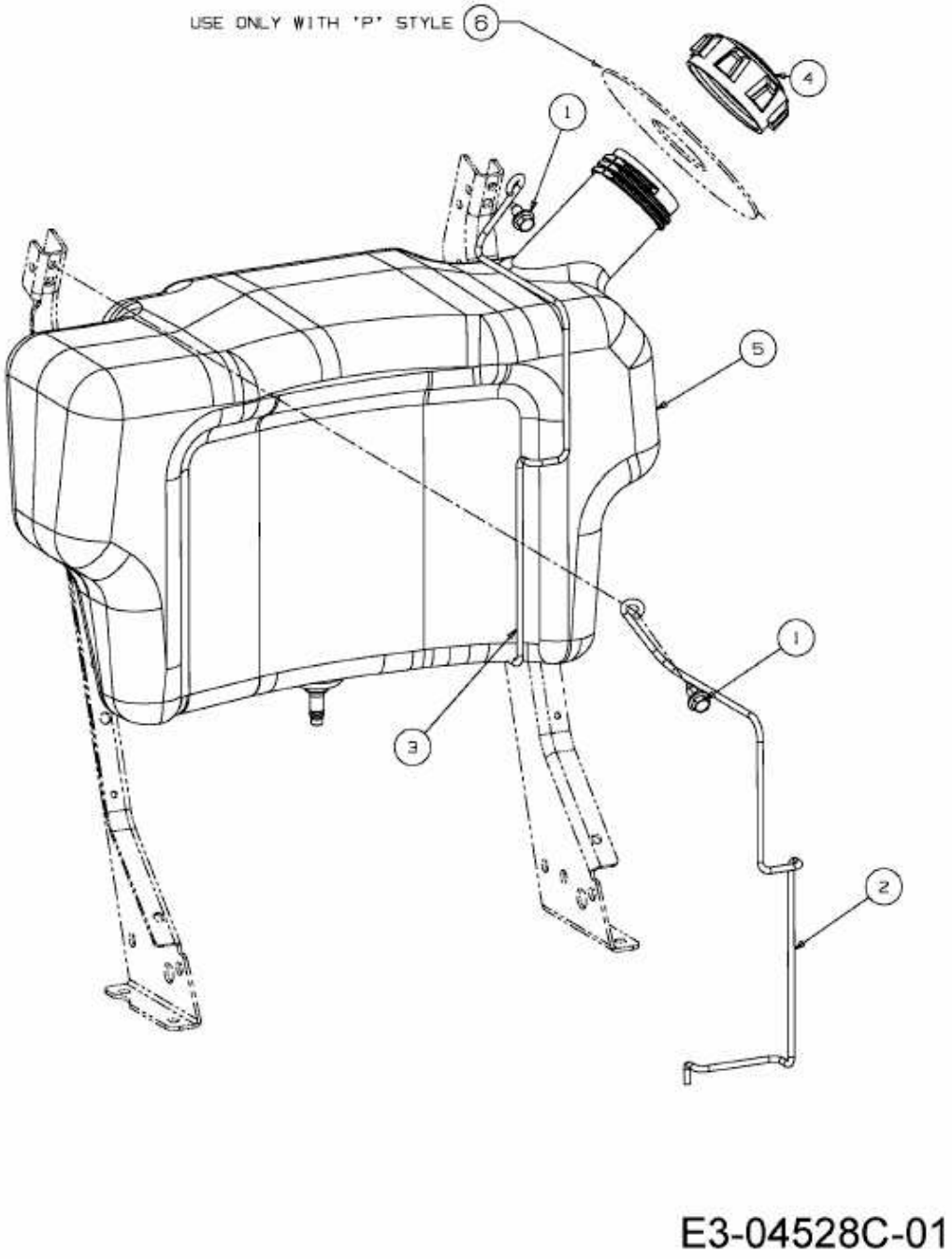272-105 TWINH > 13HU99GN615 (2016) > TANK 2,75 GAL