GN 222 > 13HU763N607 (2015) > MESSER

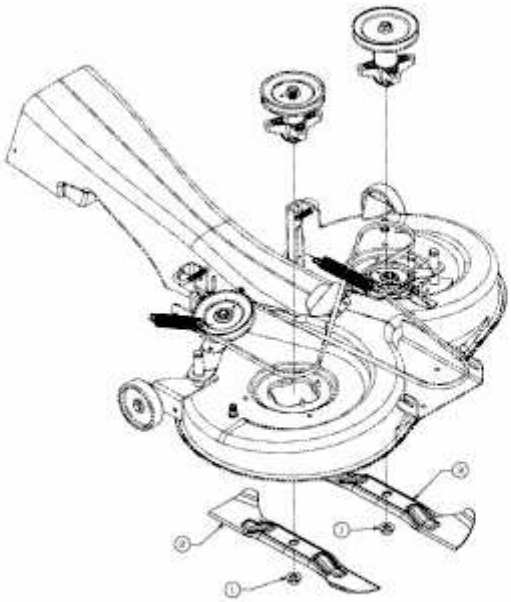

E3-03431A-01