GN 222 > 13HU763N607 (2014) > MESSERSPINDEL 618-04657A

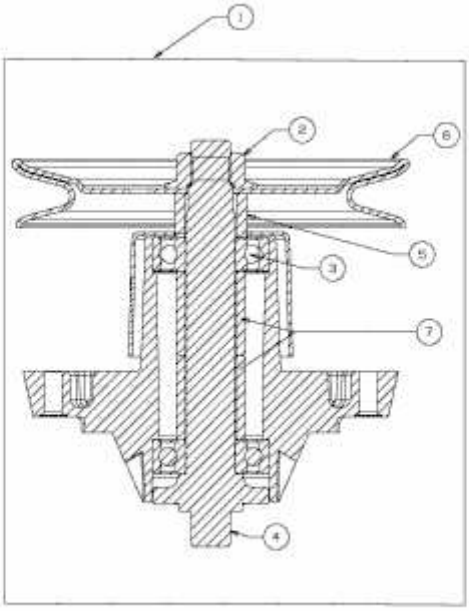

E3-03996B-01