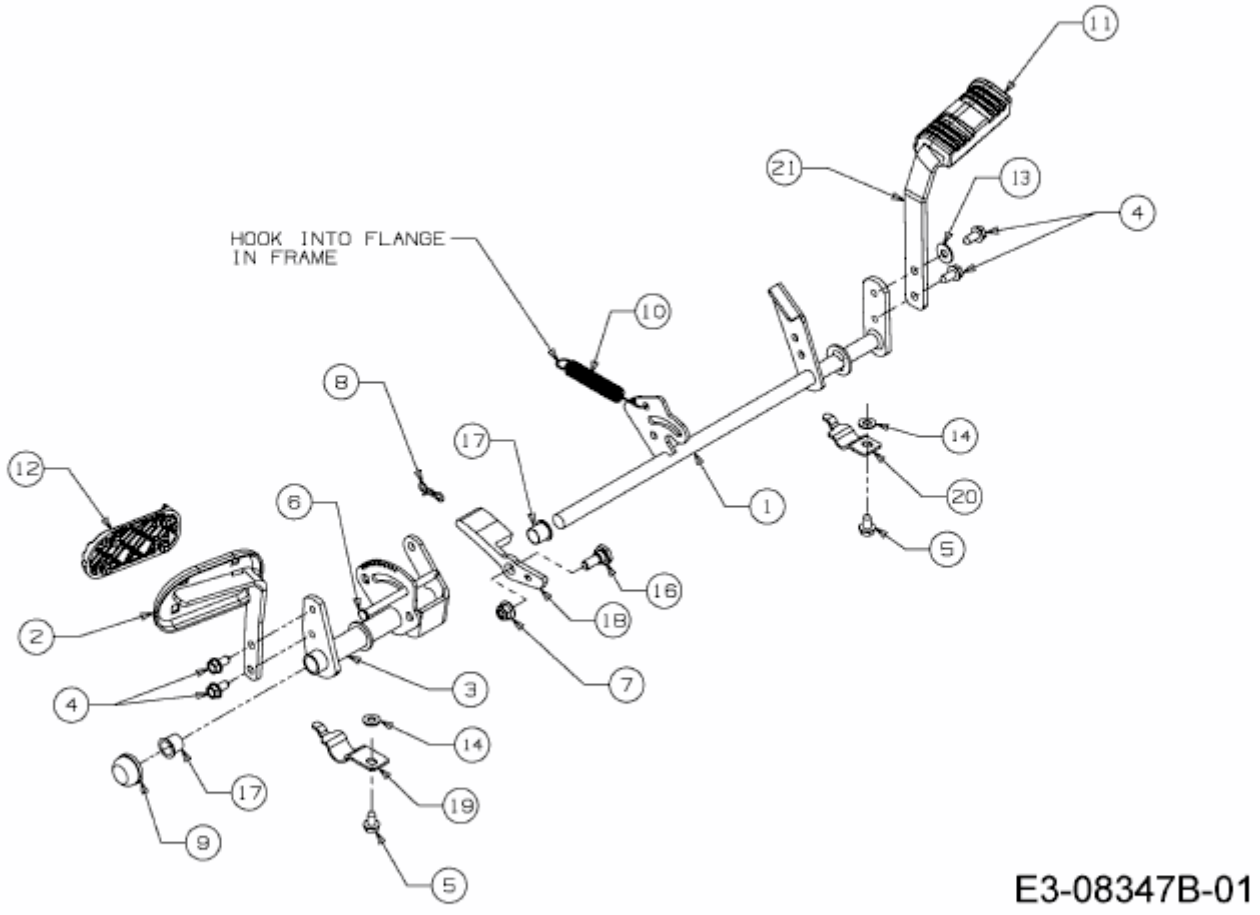LTEX 105 A > 13HT98KN682 (2014) > PEDALWELLE