CC 1018 BHG > 13HT93AG603 (2015) > VORDERACHSE

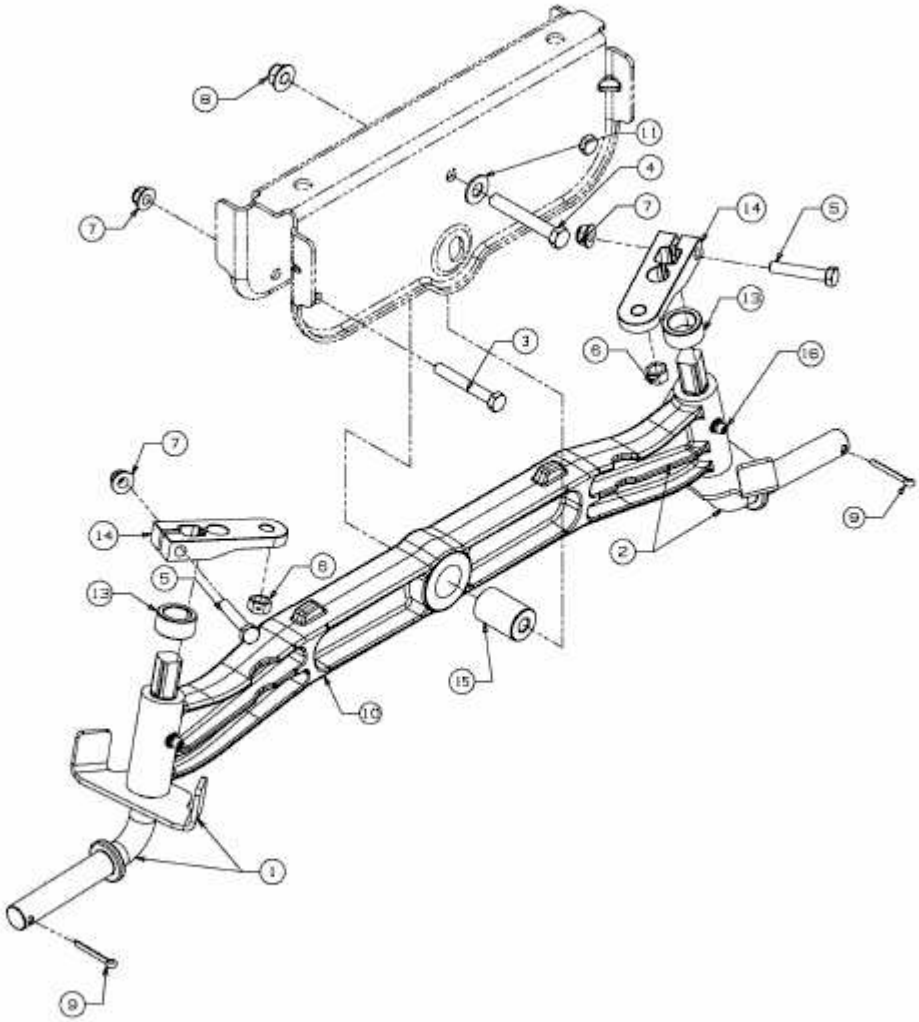

E3-04529E-01